79 NORTH 10TH STREET
KANSAS CITY, KANSAS 66102
913-371-5373

17103 STATE ROAD 4 EAST
GOSHEN, INDIANA 46528
574-534-1516

CONTENTS

AUTOMOTIVE DASH AIR

BUS UNITS

RV SYSTEMS

LIMOUSINE SYSTEMS

OFF ROAD UNITS

REAR HEAT/COOL & SPECIAL APPLICATIONS

PARTS GUIDE

TROUBLE SHOOTING

CUSTOM ROTARY CONTROL HEAD WIRING ELECTRIC BLEND AIR UNIT

CONTROL HEAD ASSY P/N 4102804 MAIN WIRE HARNESS P/N 4103772
(MODE SWITCH P/N 4102805, TEMP. RHEOSTAT P/N 4102735, BLWR SWT P/N 4100362)

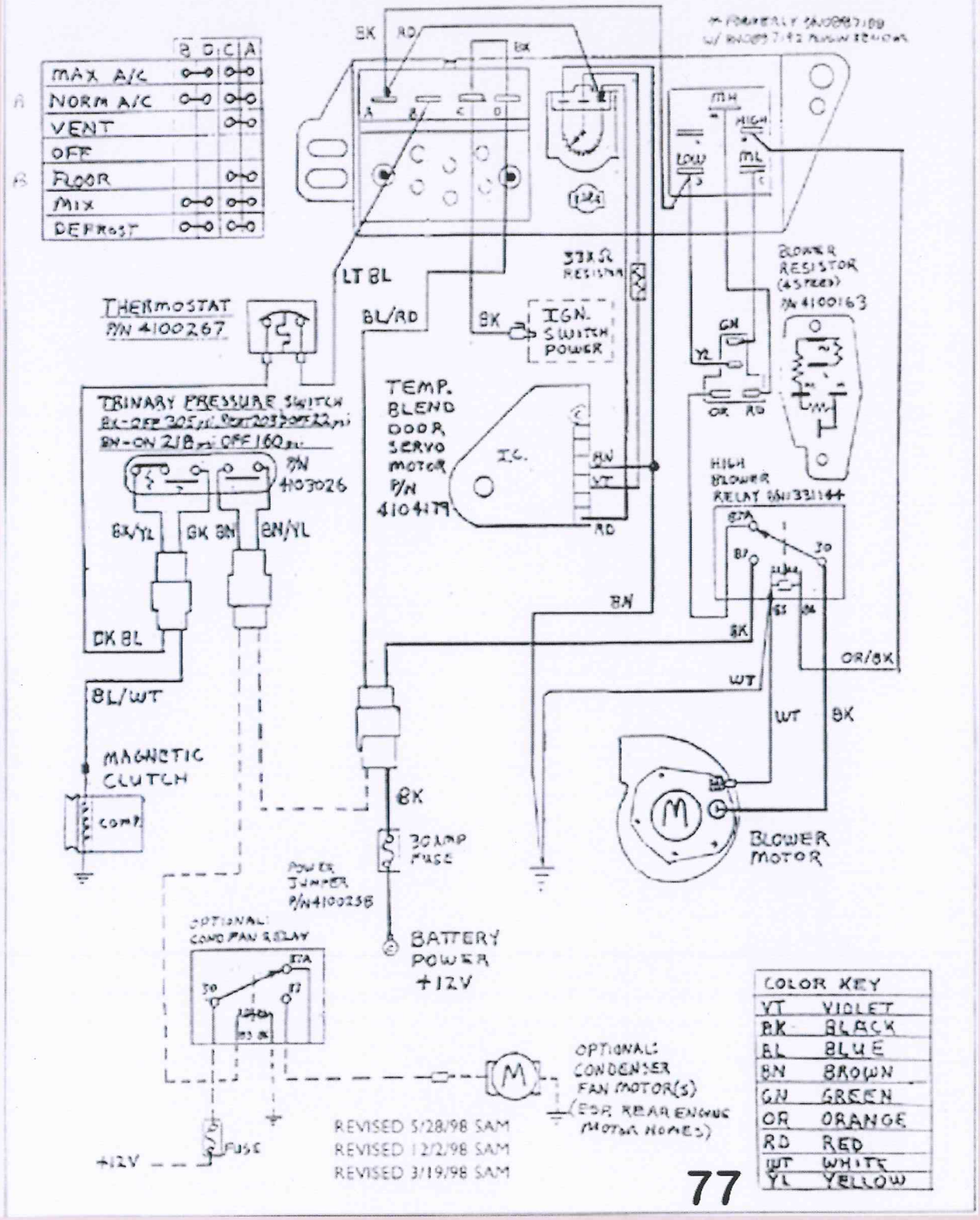

79 NORTH 10TH STREET
KANSAS CITY, KANSAS 66102
913-371-5373

17103 STATE ROAD 4 EAST
GOSHEN, INDIANA 46528
574-534-1516

CONTENTS

AUTOMOTIVE DASH AIR

BUS UNITS

RV SYSTEMS

LIMOUSINE SYSTEMS

OFF ROAD UNITS

REAR HEAT/COOL & SPECIAL APPLICATIONS

PARTS GUIDE

TROUBLE SHOOTING

CUSTOM ROTARY CONTROL HEAD WIRING VACUUM OPERATION DIAGRAM (ELECTRIC BLEND AIR)

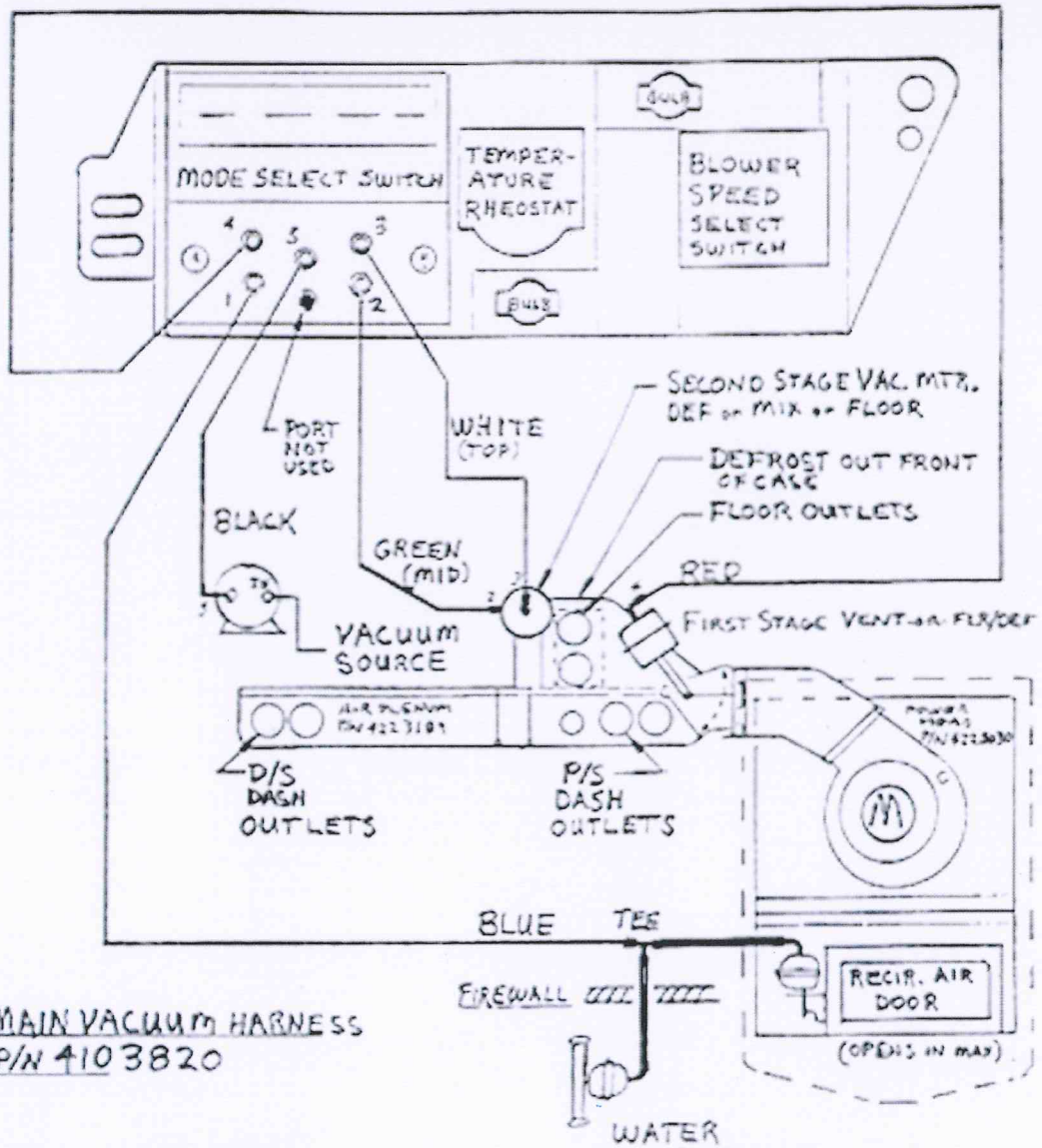

MAIN VACUUM HARNESS
P/N 4103820

MODE	PORT # 1	2	3	4	S
MAX A/C	●	○	○	●	●
NORM A/C		○	○	●	●
VENT		○	○	●	●
OFF	●	○	○		●
FLOOR		●	●	●	●
MIX			●	●	●
DEFROST					○

79 NORTH 10TH STREET
KANSAS CITY, KANSAS 66102
913-371-5373

17103 STATE ROAD 4 EAST
GOSHEN, INDIANA 46528
574-534-1516

CONTENTS

AUTOMOTIVE DASH AIR

BUS UNITS

RV SYSTEMS

LIMOUSINE SYSTEMS

OFF ROAD UNITS

REAR HEAT/COOL & SPECIAL APPLICATIONS

PARTS GUIDE

TROUBLE SHOOTING

CUSTOM ROTARY CONTROL HEAD WIRING ELECTRIC WATER VALVE UNIT

CONTROL HEAD ASSY P/N 4102804 MAIN WIRE HARNESS P/N 4103773
(MODE SWITCH P/N 4102805, TEMP. RHEOSTAT P/N 4102735, BLWR SWT P/N 4100362)

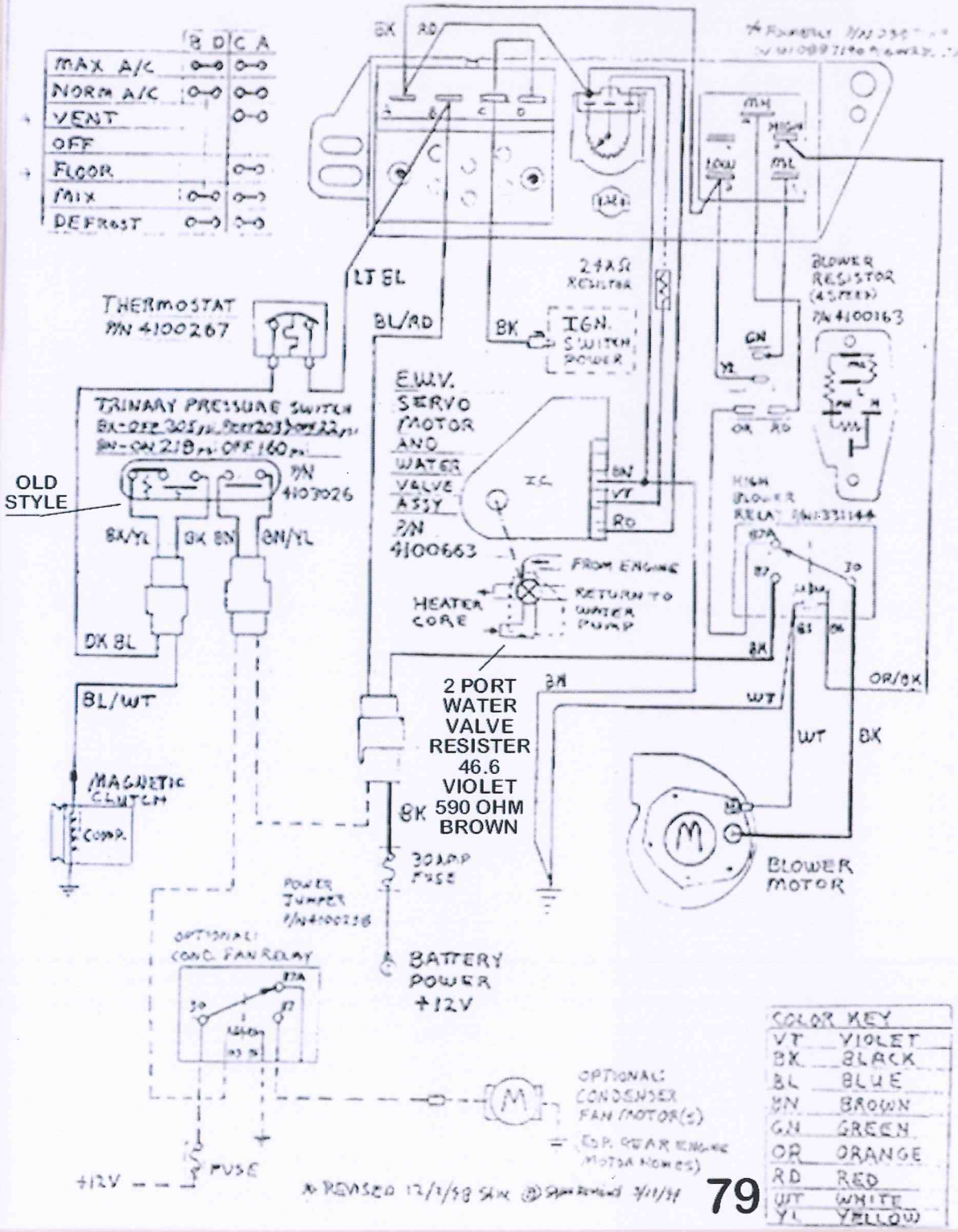

79 NORTH 10TH STREET
KANSAS CITY, KANSAS 66102
913-371-5373

17103 STATE ROAD 4 EAST
GOSHEN, INDIANA 46528
574-534-1516

CONTENTS

AUTOMOTIVE DASH AIR

BUS UNITS

RV SYSTEMS

LIMOUSINE SYSTEMS

OFF ROAD UNITS

REAR HEAT/COOL & SPECIAL APPLICATIONS

PARTS GUIDE

TROUBLE SHOOTING

ROTARY CONTROL HEAD -- W/ELECTRIC H2O VALVE VACUUM DIAGRAM - MODE OPERATIONS CHART

CONTROL HEAD ASSEMBLY P/N 4102804
VACUUM HARNESS P/N 4103820

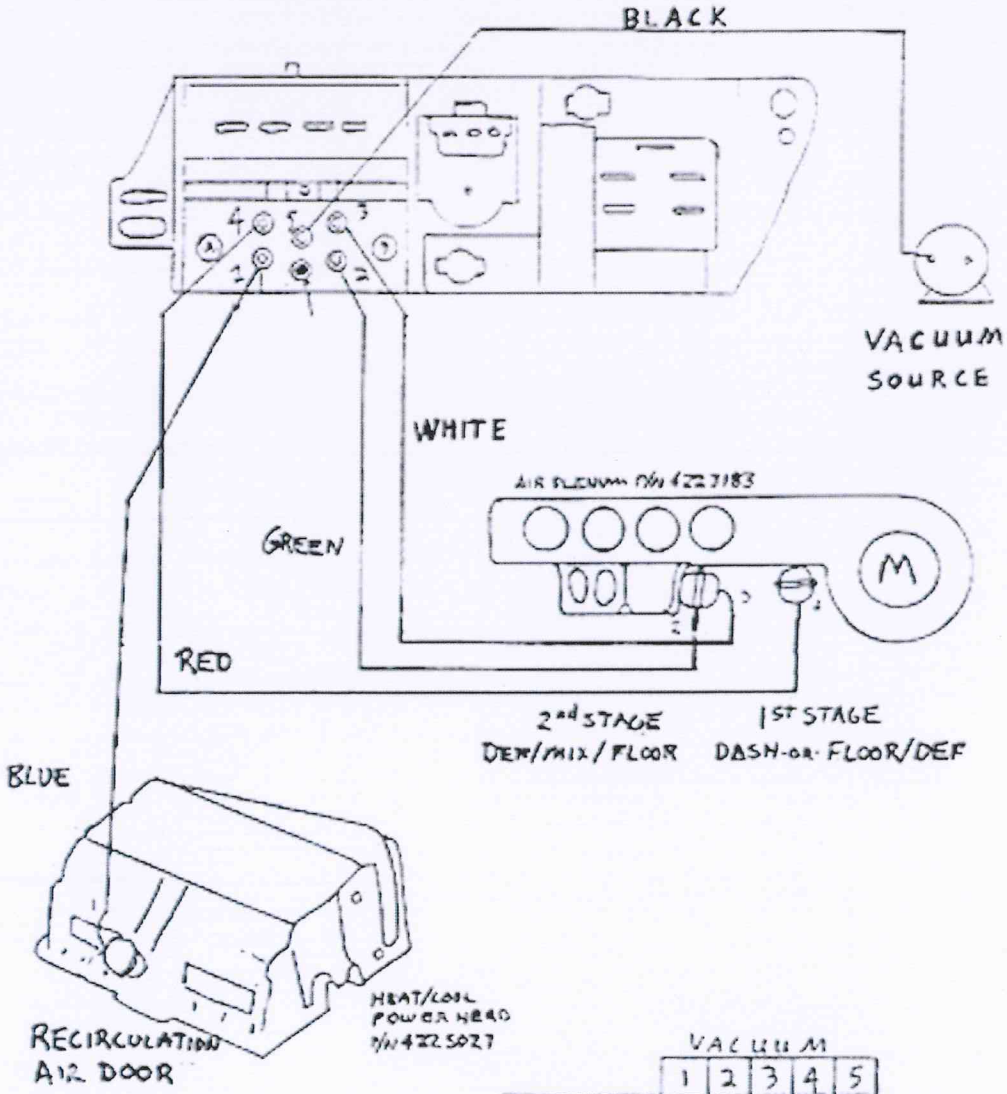

	VACUUM				
	1	2	3	4	5
MAX A/C	X	X	X	X	X
NORM A/C		X	X	X	X
VENT		X	X	X	X
OFF	X	X	X		X
FLOOR		X	X		X
MIX			X		X
DEF					X

WEBSITE
WWW.ACMEAIR.COM

EMAIL
SALES@ACMEAIR.COM

79 NORTH 10TH STREET
KANSAS CITY, KANSAS 66102
913-371-5373

17103 STATE ROAD 4 EAST
GOSHEN, INDIANA 46528
574-534-1516

CONTENTS

AUTOMOTIVE DASH AIR

BUS UNITS

RV SYSTEMS

LIMOUSINE SYSTEMS

OFF ROAD UNITS

REAR HEAT/COOL & SPECIAL APPLICATIONS

PARTS GUIDE

TROUBLE SHOOTING

"TAURUS" ROTARY CONTROL HEAD-W/ELECTRIC H20 VALVE
FRIEGHTLINER "PUSHER"

CONTROL HEAD ASSY P/N 4102811 MAIN WIRE HARNESS P/N 0887204
(MODE SELECT SWITCH P/N 4102806, TEMP. RHEOSTAT P/N 4102714, BLWR SWT P/N 4102808)

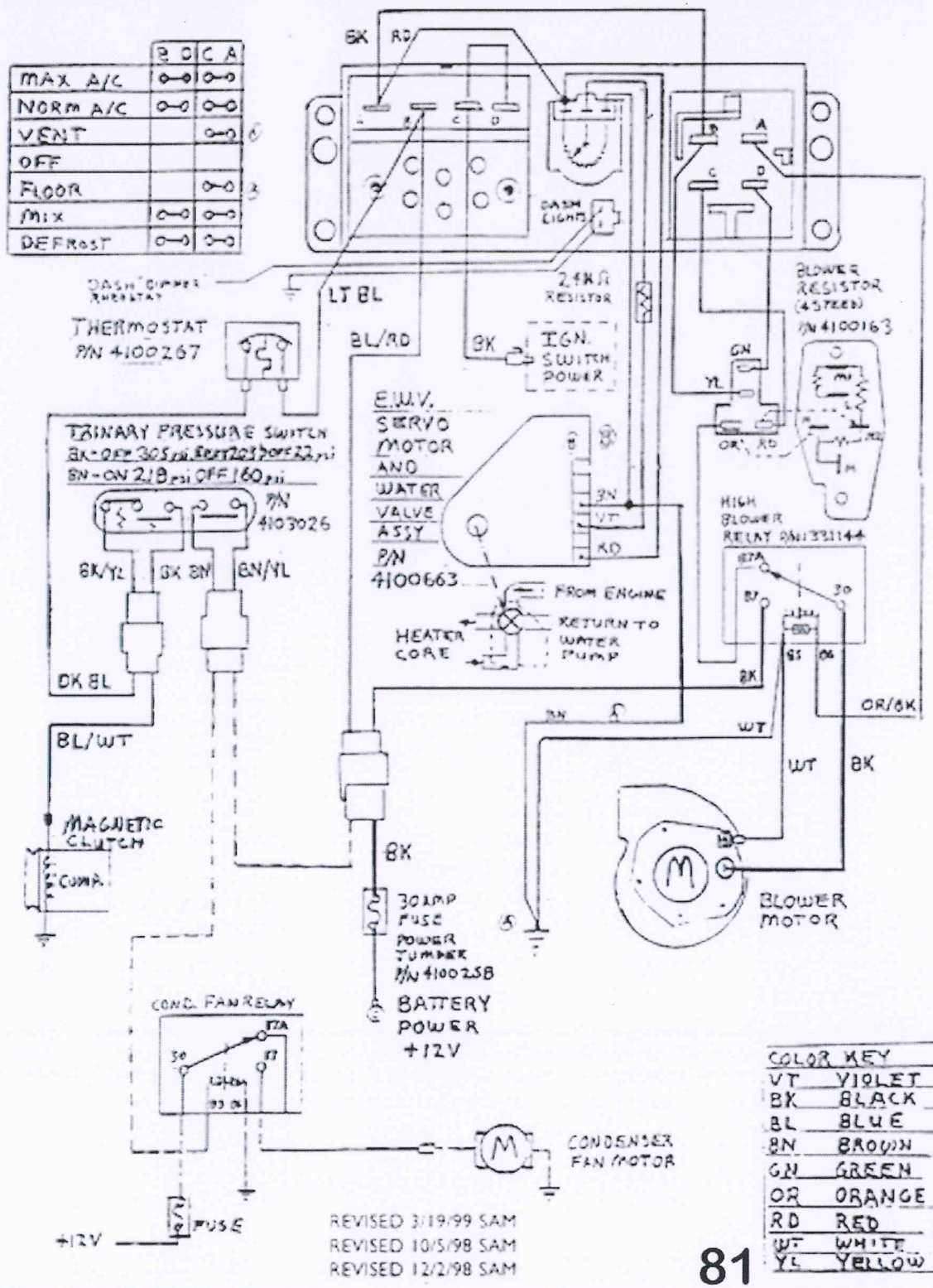

REVISED 3/19/99 SAM
REVISED 10/5/98 SAM
REVISED 12/2/98 SAM

79 NORTH 10TH STREET
KANSAS CITY, KANSAS 66102
913-371-5373

17103 STATE ROAD 4 EAST
GOSHEN, INDIANA 46528
574-534-1516

CONTENTS

AUTOMOTIVE DASH AIR

BUS UNITS

RV SYSTEMS

LIMOUSINE SYSTEMS

OFF ROAD UNITS

REAR HEAT/COOL & SPECIAL APPLICATIONS

PARTS GUIDE

TROUBLE SHOOTING

'TAURUS' ROTARY CONTROL HEAD - W/ELECTRIC H2O VALVE VACCUM DIAGRAM - MODE OPERATIONS CHART

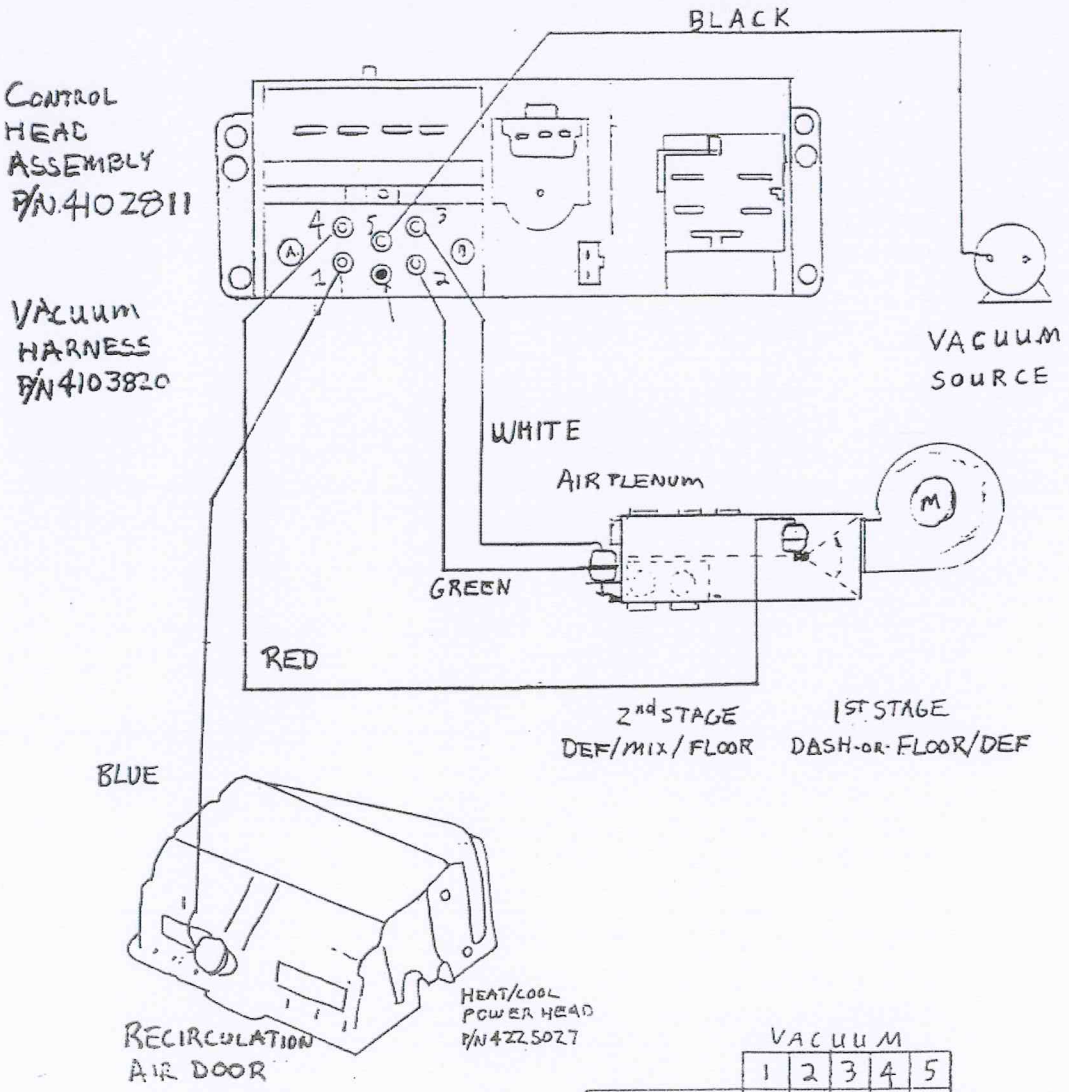

	VACUUM				
	1	2	3	4	5
MAX A/C	X	X	X	X	X
NORM A/C		X	X	X	X
VENT		X	X	X	X
OFF	X	X	X		X
FLOOR		X	X		X
MIX			X		X
DEF					X

SAM 10/5/98

79 NORTH 10TH STREET
KANSAS CITY, KANSAS 66102
913-371-5373

17103 STATE ROAD 4 EAST
GOSHEN, INDIANA 46528
574-534-1516

CONTENTS

AUTOMOTIVE DASH AIR

BUS UNITS

RV SYSTEMS

LIMOUSINE SYSTEMS

OFF ROAD UNITS

REAR HEAT/COOL & SPECIAL APPLICATIONS

PARTS GUIDE

TROUBLE SHOOTING

'TAURUS' ROTARY CONTROL HEAD - W/ELECTRIC H2O VALVE
*** FORD 1999 - CHASSIS***

CONTROL HEAD ASSY P/N 4102811. MAIN HARNESS P/N 0887204
(MODE SELECT SWITCH 4102806, TEMP. RHEOSTAT P/N 4102714, BLWR SW P/N 4102808)

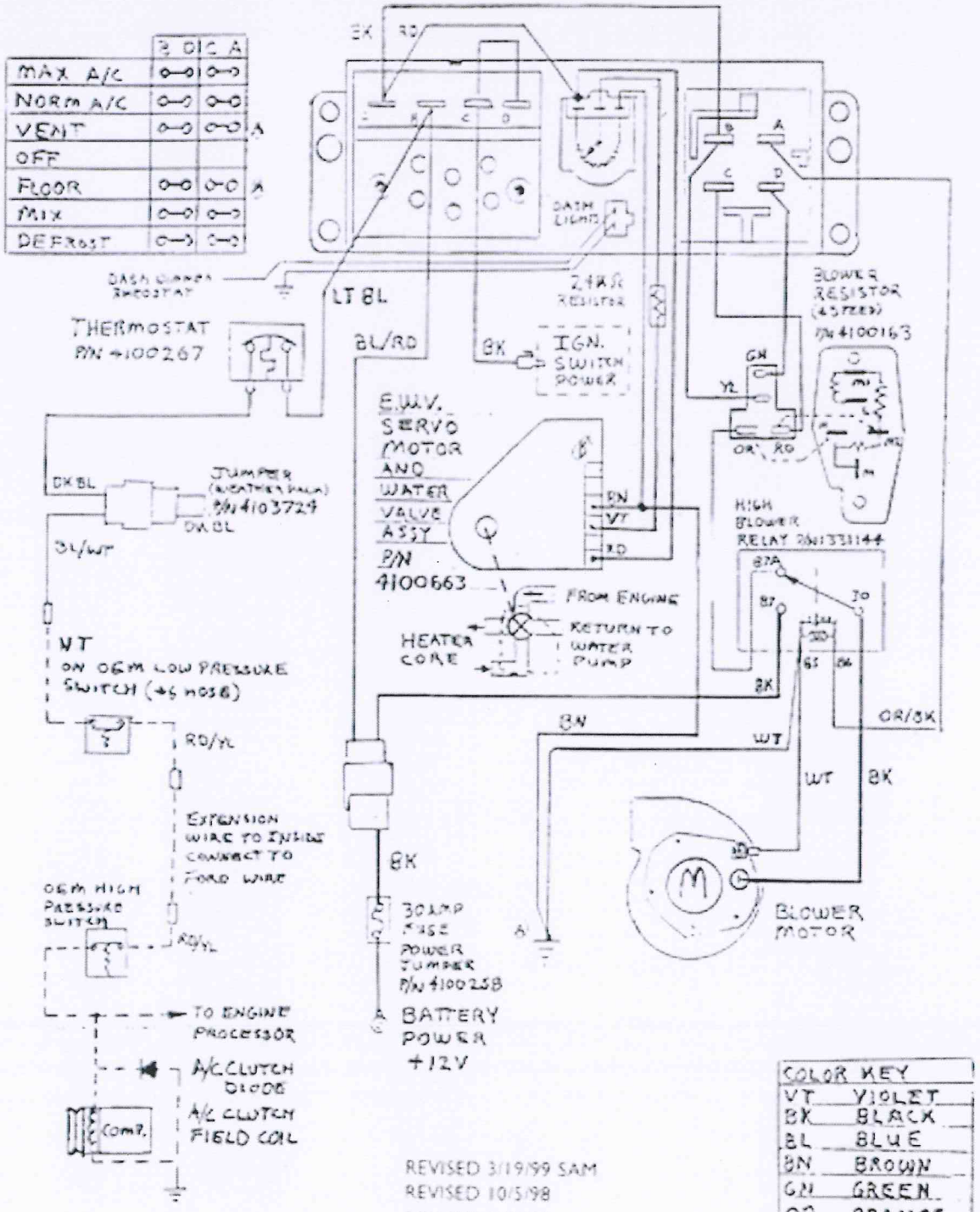

REVISED 3/19/99 SAM
REVISED 10/5/98
REVISED 12/2/98

79 NORTH 10TH STREET
KANSAS CITY, KANSAS 66102
913-371-5373

17103 STATE ROAD 4 EAST
GOSHEN, INDIANA 46528
574-534-1516

CONTENTS

AUTOMOTIVE DASH AIR

BUS UNITS

RV SYSTEMS

LIMOUSINE SYSTEMS

OFF ROAD UNITS

REAR HEAT/COOL & SPECIAL APPLICATIONS

PARTS GUIDE

TROUBLE SHOOTING

'TAURUS' ROTARY CONTROL HEAD - W/ELECTRIC H2O VALVE VACCUM DIAGRAM - MODE OPERATIONS CHART

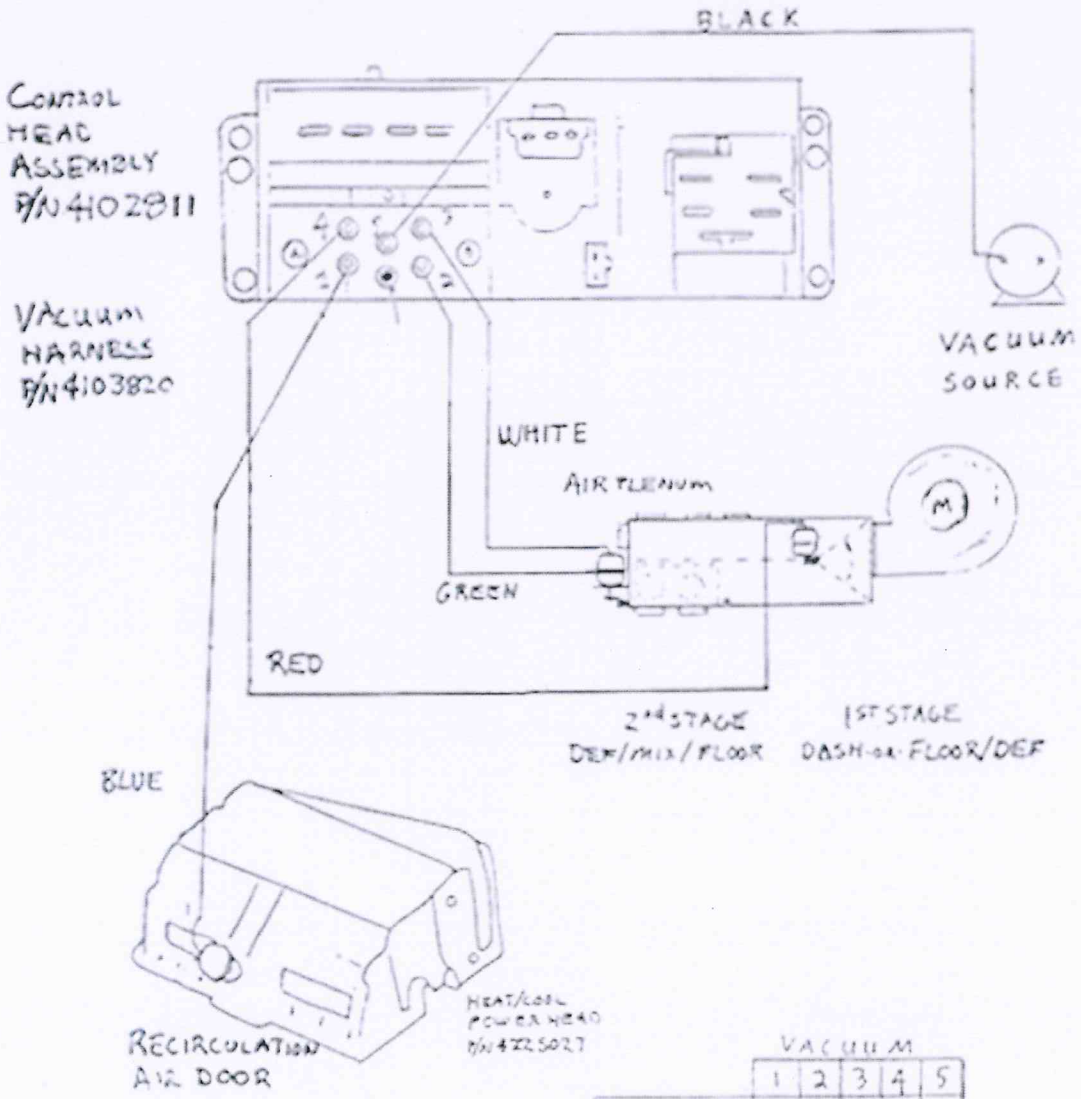

	VACUUM				
	1	2	3	4	5
MAX A/C	X	X	X	X	X
NORM A/C		X	X	X	X
VENT		X	X	X	X
DEF	X	X	X		X
FLOOR		X	X		X
MIX			X		X
DEF					X

79 NORTH 10TH STREET
KANSAS CITY, KANSAS 66102
913-371-5373

17103 STATE ROAD 4 EAST
GOSHEN, INDIANA 46528
574-534-1516

CONTENTS

AUTOMOTIVE DASH AIR

BUS UNITS

RV SYSTEMS

LIMOUSINE SYSTEMS

OFF ROAD UNITS

REAR HEAT/COOL & SPECIAL APPLICATIONS

PARTS GUIDE

TROUBLE SHOOTING

MOTOR HOME WIRING DIAGRAM - CLASS A (CAVALIER) CONTROL HEAD WITH ELECTRIC WATER VALVE

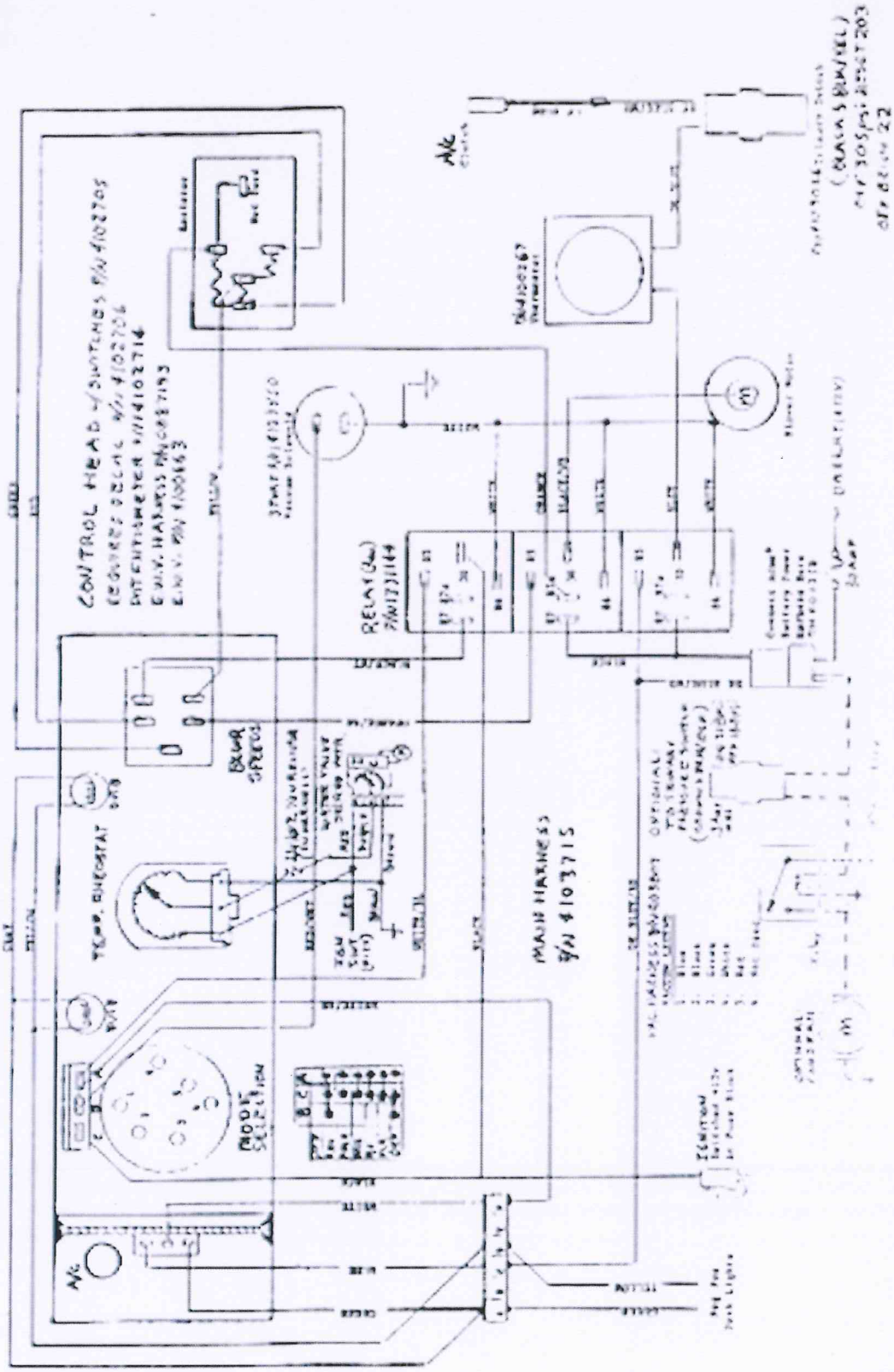

79 NORTH 10TH STREET
KANSAS CITY, KANSAS 66102
913-371-5373

17103 STATE ROAD 4 EAST
GOSHEN, INDIANA 46528
574-534-1516

CONTENTS

AUTOMOTIVE DASH AIR

BUS UNITS

RV SYSTEMS

LIMOUSINE SYSTEMS

OFF ROAD UNITS

REAR HEAT/COOL & SPECIAL APPLICATIONS

PARTS GUIDE

TROUBLE SHOOTING

MOTOR HOME VACUUM DIAGRAM - CLASS A (CAVALIER)

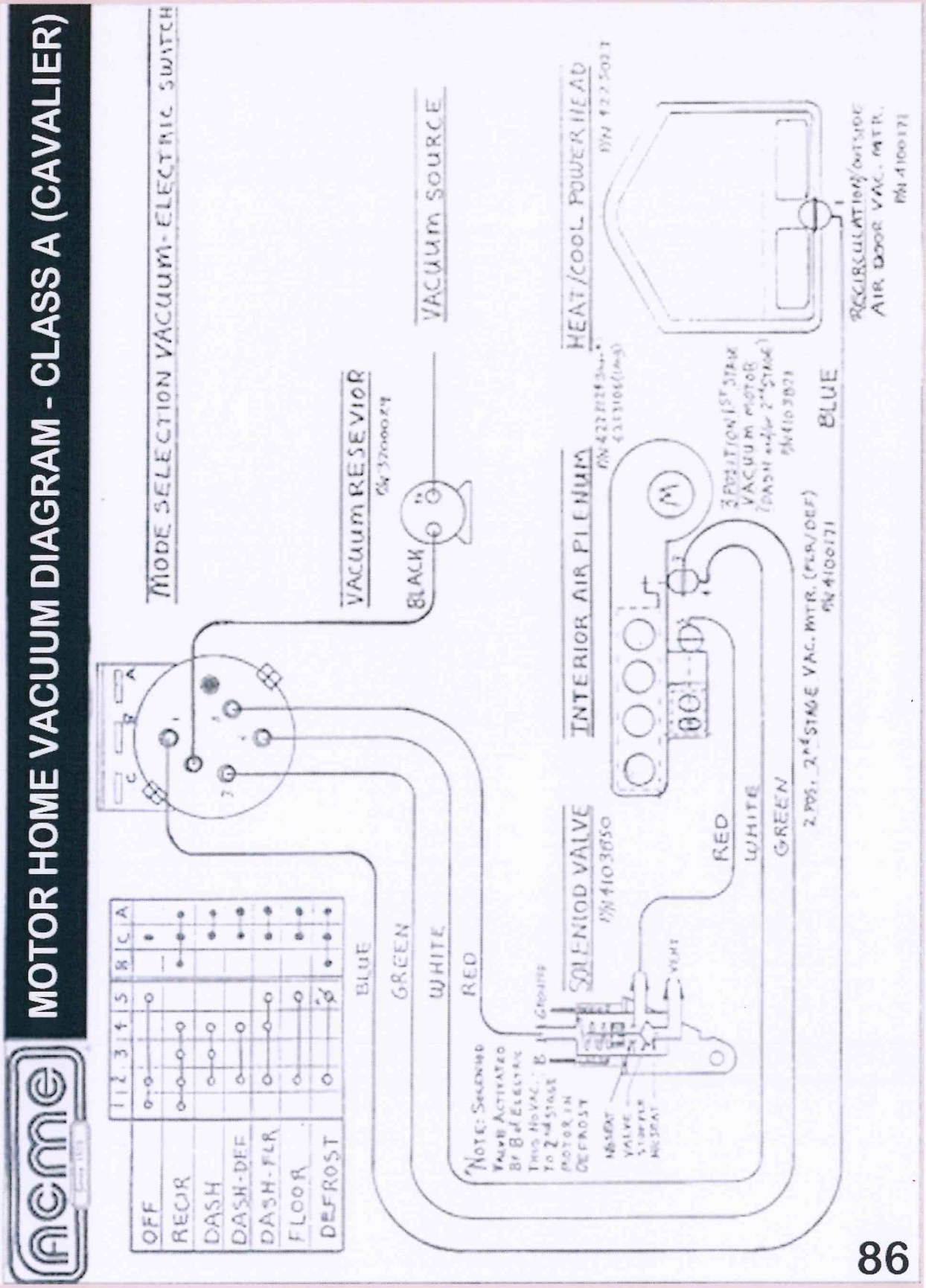

79 NORTH 10TH STREET
KANSAS CITY, KANSAS 66102
913-371-5373

17103 STATE ROAD 4 EAST
GOSHEN, INDIANA 46528
574-534-1516

CONTENTS

AUTOMOTIVE DASH AIR

BUS UNITS

RV SYSTEMS

LIMOUSINE SYSTEMS

OFF ROAD UNITS

REAR HEAT/COOL & SPECIAL APPLICATIONS

PARTS GUIDE

TROUBLE SHOOTING

MOTOR HOME WIRING DIAGRAM - CLASS A (CAVALIER) CONTROL HEAD

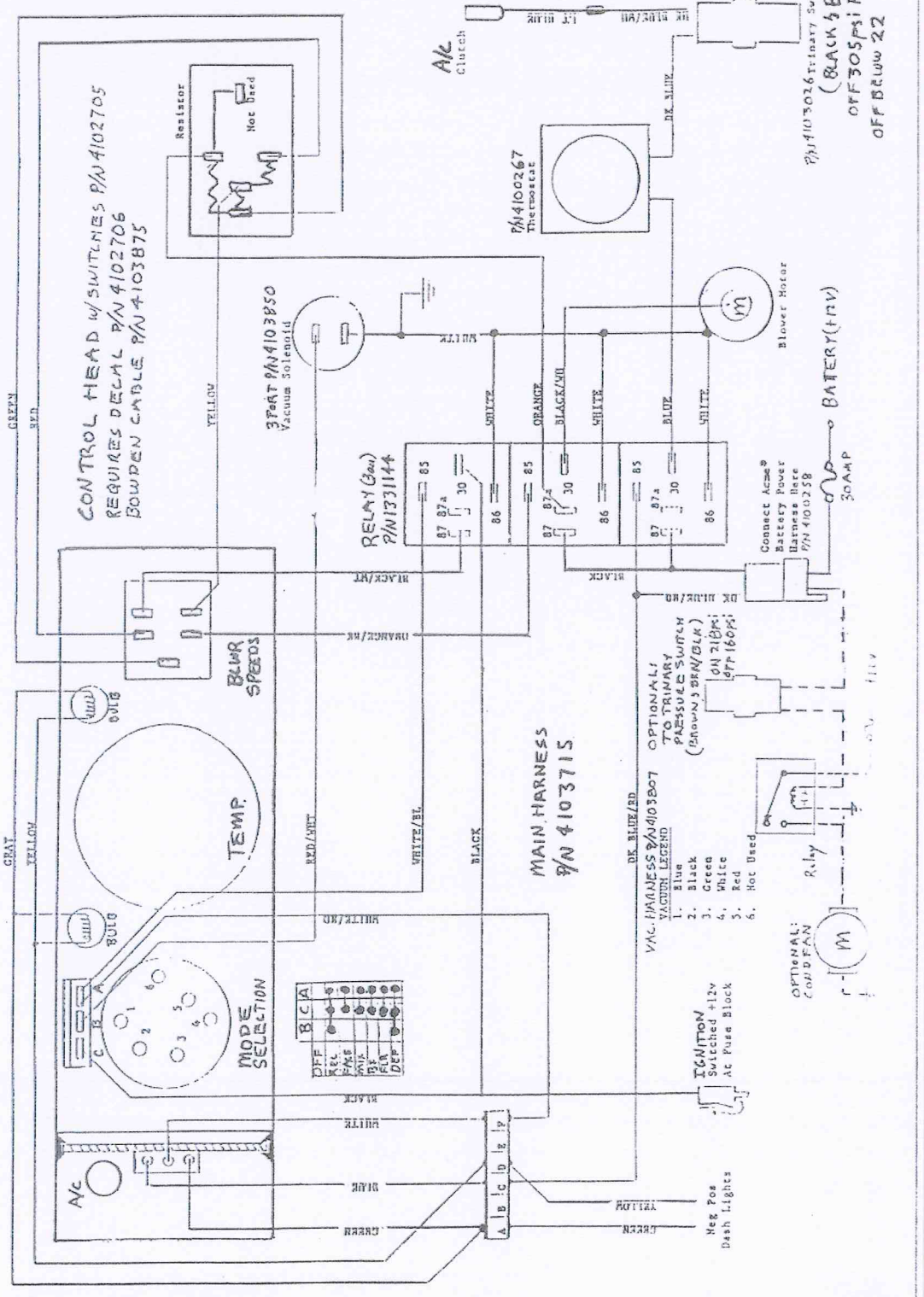

79 NORTH 10TH STREET
KANSAS CITY, KANSAS 66102
913-371-5373

17103 STATE ROAD 4 EAST
GOSHEN, INDIANA 46528
574-534-1516

CONTENTS

AUTOMOTIVE DASH AIR

BUS UNITS

RV SYSTEMS

LIMOUSINE SYSTEMS

OFF ROAD UNITS

REAR HEAT/COOL & SPECIAL APPLICATIONS

PARTS GUIDE

TROUBLE SHOOTING

BLEND AIR A/C SYSTEM VACUUM DIAGRAM (MODIFIED TAHOE CONTROL HEAD)

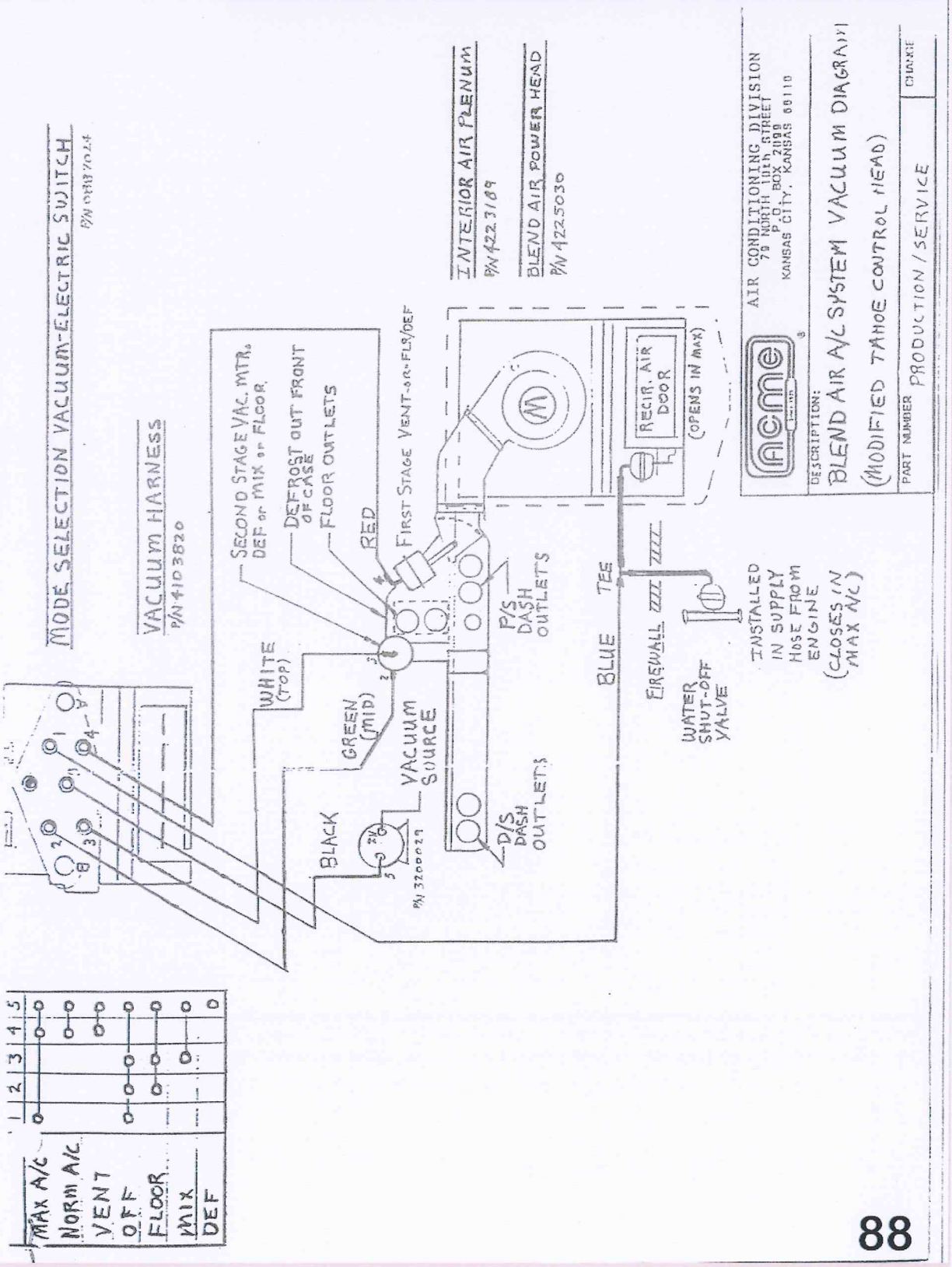

79 NORTH 10TH STREET
KANSAS CITY, KANSAS 66102
913-371-5373

17103 STATE ROAD 4 EAST
GOSHEN, INDIANA 46528
574-534-1516

CONTENTS

AUTOMOTIVE DASH AIR

BUS UNITS

RV SYSTEMS

LIMOUSINE SYSTEMS

OFF ROAD UNITS

REAR HEAT/COOL & SPECIAL APPLICATIONS

PARTS GUIDE

TROUBLE SHOOTING

BLEND AIR A/C SYSTEM VACCUM DIAGRAM (MODIFIED TAHOE CONTROL HEAD) FOR 4213184

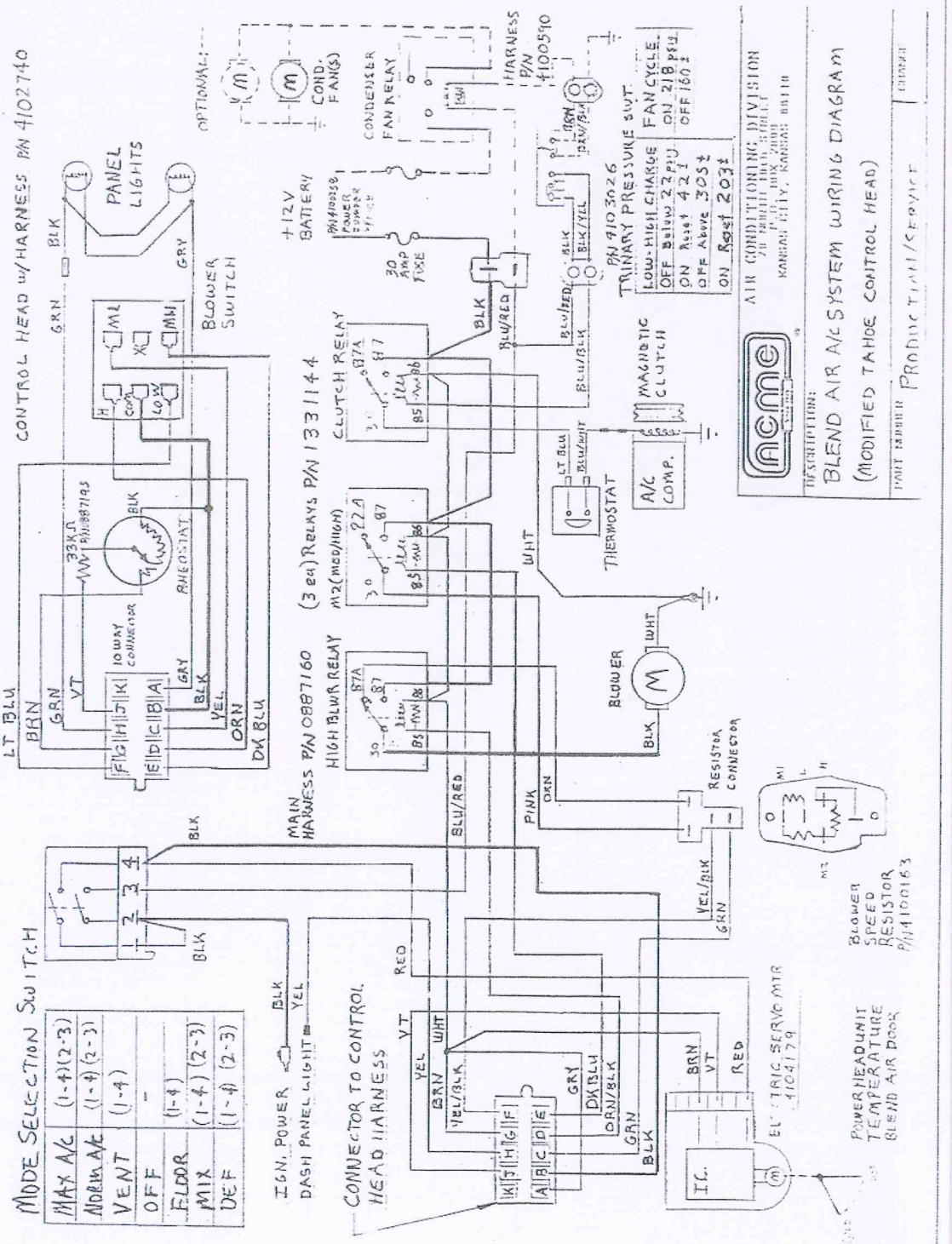

79 NORTH 10TH STREET
KANSAS CITY, KANSAS 66102
913-371-5373

17103 STATE ROAD 4 EAST
GOSHEN, INDIANA 46528
574-534-1516

CONTENTS

AUTOMOTIVE DASH AIR

BUS UNITS

RV SYSTEMS

LIMOUSINE SYSTEMS

OFF ROAD UNITS

REAR HEAT/COOL & SPECIAL APPLICATIONS

PARTS GUIDE

TROUBLE SHOOTING

MOTOR HOME WIRING DIAGRAM - CLASS A (TAHOE)

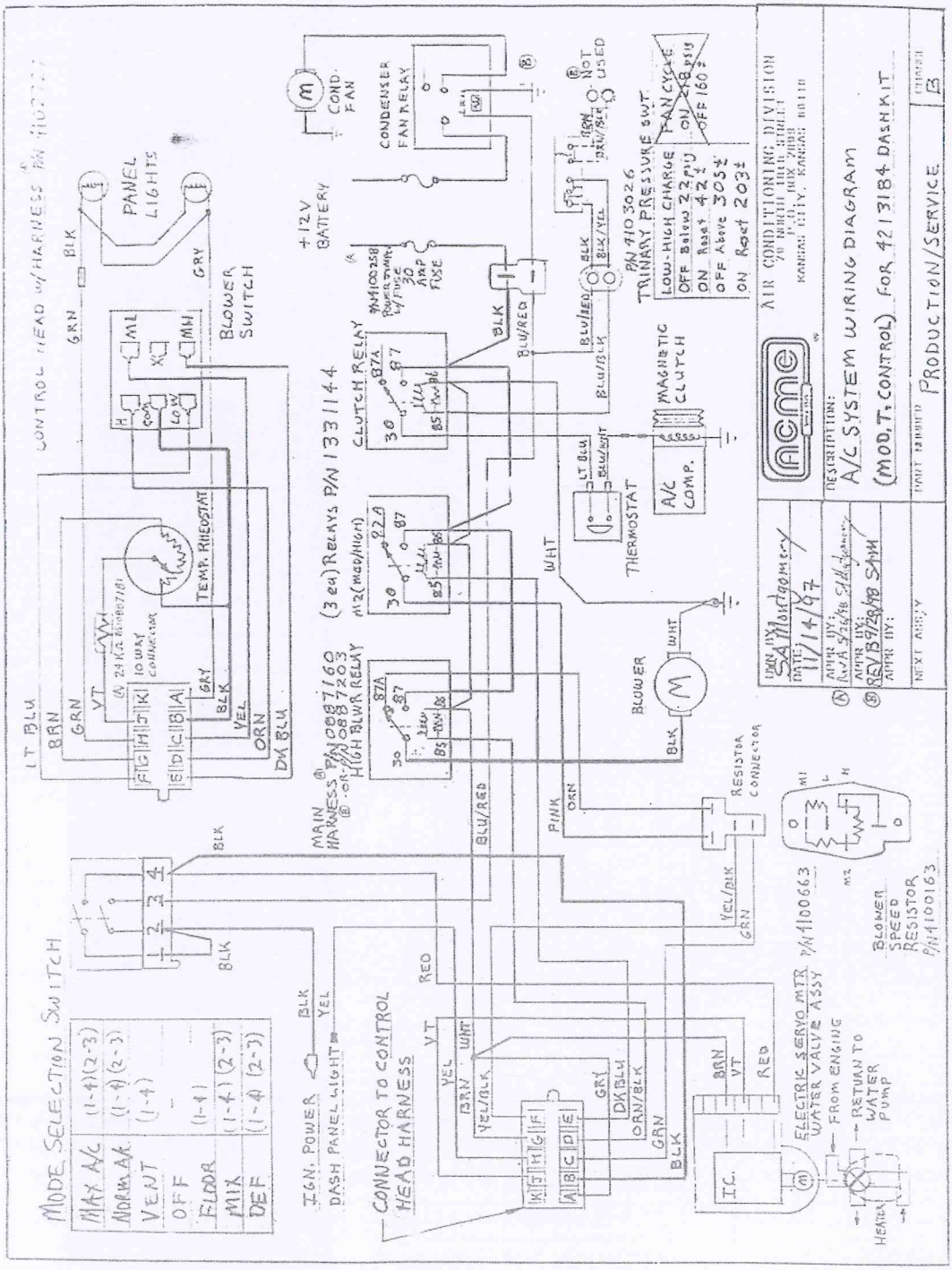

WEBSITE
WWW.ACMEAIR.COM

EMAIL
SALES@ACMEAIR.COM

79 NORTH 10TH STREET
KANSAS CITY, KANSAS 66102
913-371-5373

17103 STATE ROAD 4 EAST
GOSHEN, INDIANA 46528
574-534-1516

CONTENTS

AUTOMOTIVE DASH AIR

BUS UNITS

RV SYSTEMS

LIMOUSINE SYSTEMS

OFF ROAD UNITS

REAR HEAT/COOL & SPECIAL APPLICATIONS

PARTS GUIDE

TROUBLE SHOOTING

BLEND AIR A/C SYSTEM VACCUM DIAGRAM (MODIFIED TAHOE CONTROL HEAD) FOR 421 3184 DASH KIT

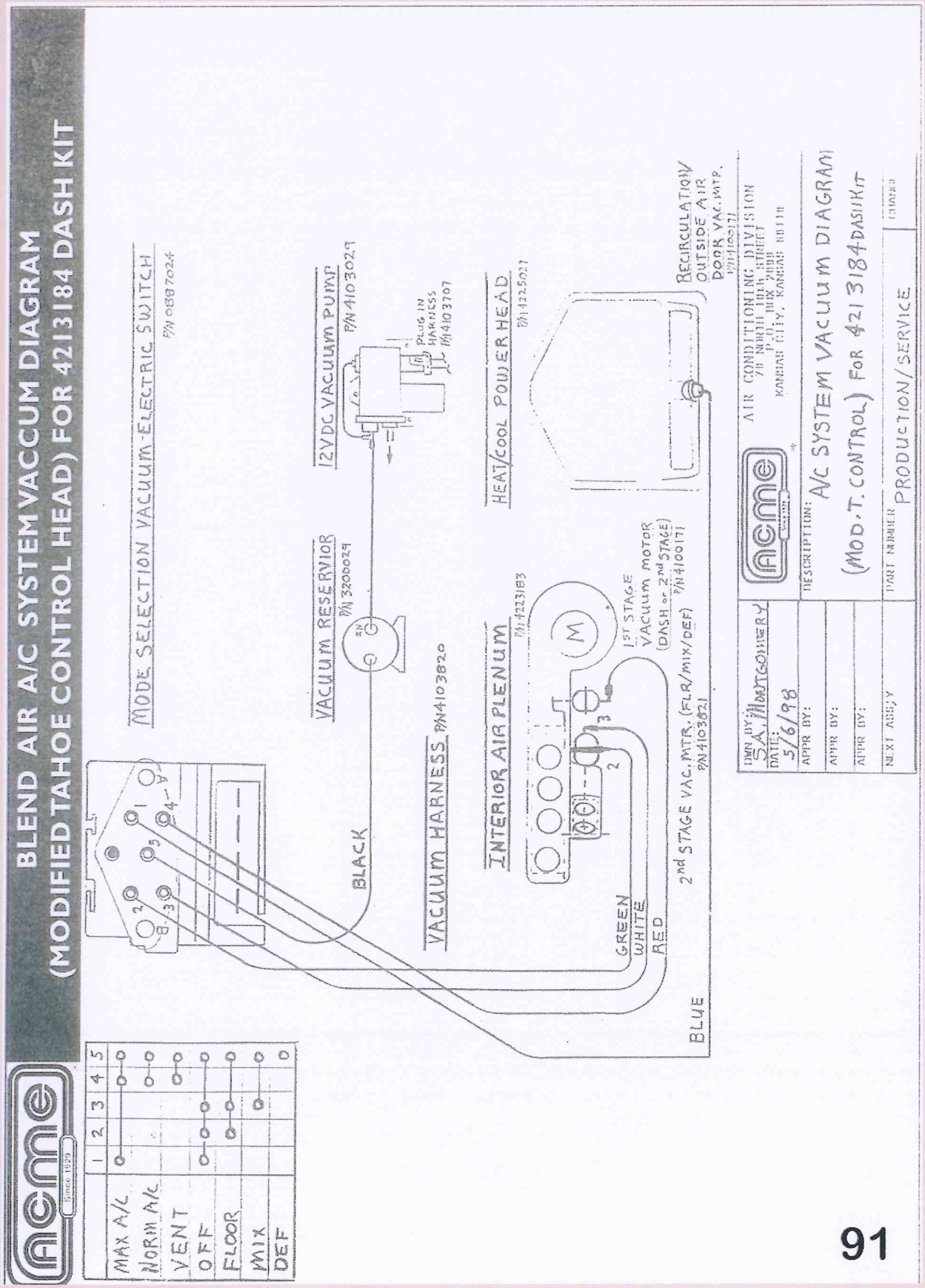

79 NORTH 10TH STREET
KANSAS CITY, KANSAS 66102
913-371-5373

17103 STATE ROAD 4 EAST
GOSHEN, INDIANA 46528
574-534-1516

CONTENTS

AUTOMOTIVE DASH AIR

BUS UNITS

RV SYSTEMS

LIMOUSINE SYSTEMS

OFF ROAD UNITS

REAR HEAT/COOL & SPECIAL APPLICATIONS

PARTS GUIDE

TROUBLE SHOOTING

DUAL CONTROL BLEND AIR RE RV HVAC

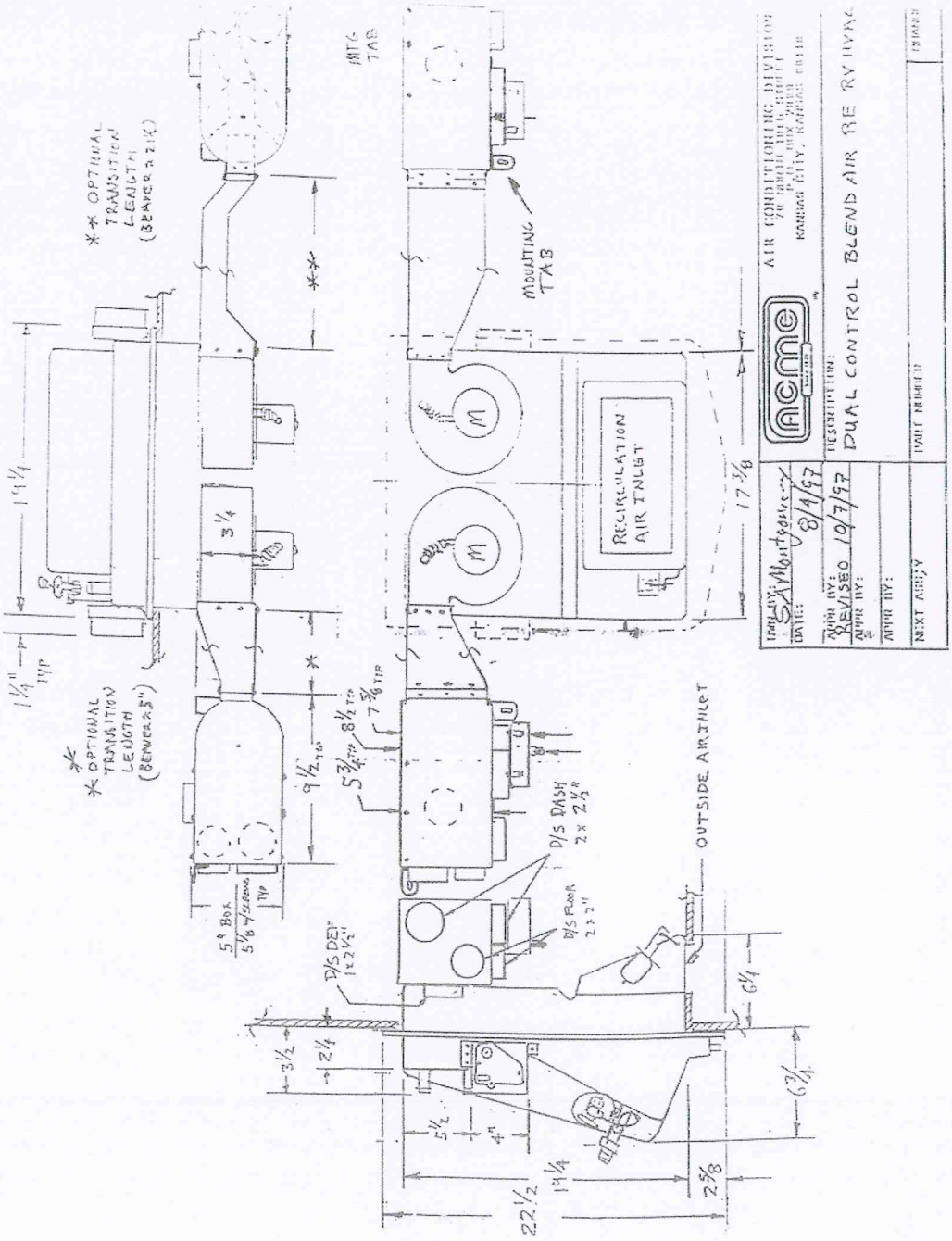

79 NORTH 10TH STREET
KANSAS CITY, KANSAS 66102
913-371-5373

17103 STATE ROAD 4 EAST
GOSHEN, INDIANA 46528
574-534-1516

CONTENTS

AUTOMOTIVE DASH AIR

BUS UNITS

RV SYSTEMS

LIMOUSINE SYSTEMS

OFF ROAD UNITS

REAR HEAT/COOL & SPECIAL APPLICATIONS

PARTS GUIDE

TROUBLE SHOOTING

DUAL CONTROL (HIS/HERS) WIRING SCHEMATIC
DRAWN BY S.A. MONTGOMERY 1/6/98

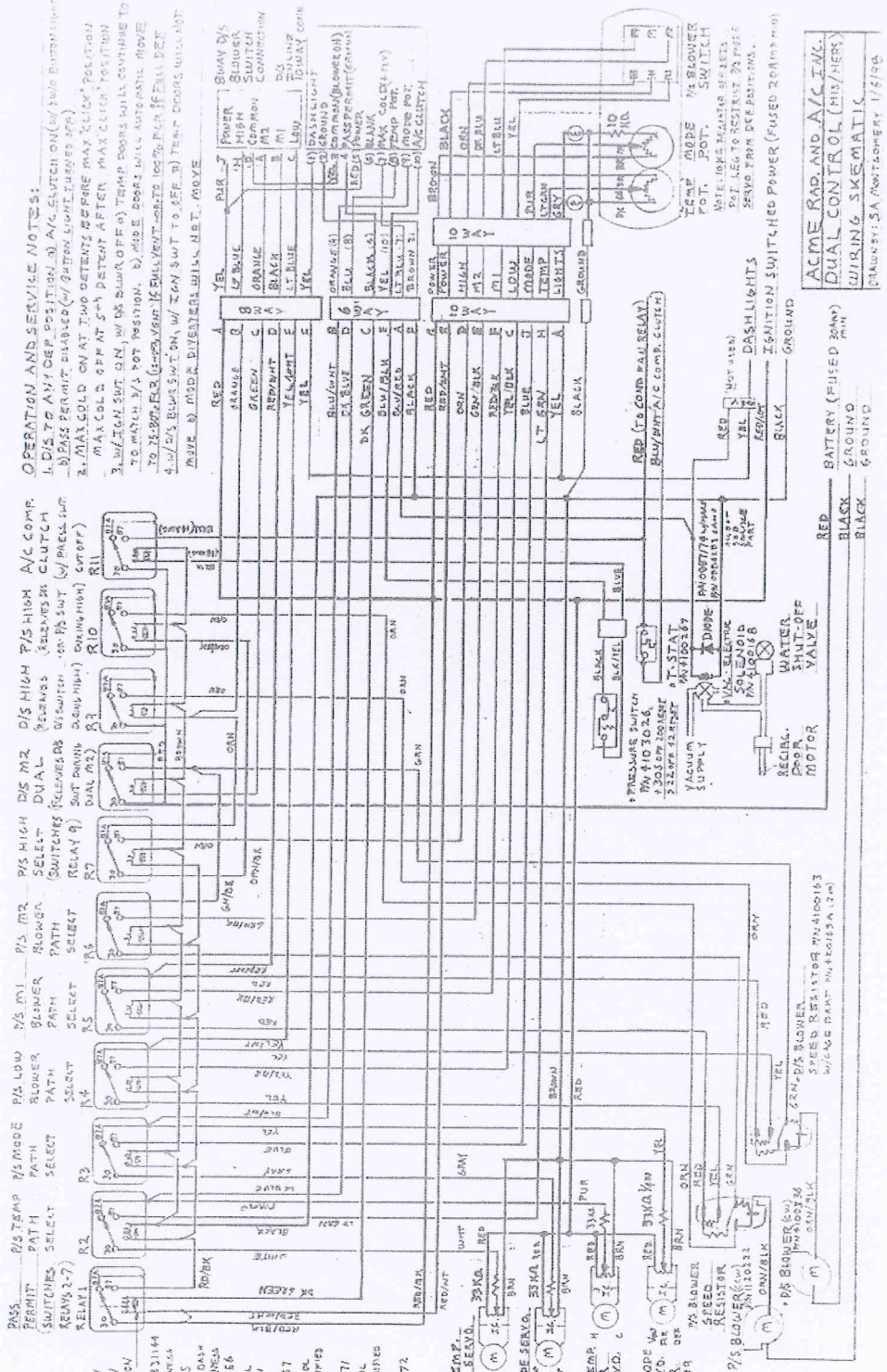

79 NORTH 10TH STREET
KANSAS CITY, KANSAS 66102
913-371-5373

17103 STATE ROAD 4 EAST
GOSHEN, INDIANA 46528
574-534-1516

CONTENTS

AUTOMOTIVE DASH AIR

BUS UNITS

RV SYSTEMS

LIMOUSINE SYSTEMS

OFF ROAD UNITS

REAR HEAT/COOL & SPECIAL APPLICATIONS

PARTS GUIDE

TROUBLE SHOOTING

RAISED RAIL FREIGHTLINER

CUSTOM ROTARY CONTROL HEAD WIRING

ELECTRIC WATER VALVE UNIT

CONTROL HEAD ASSY P/N 4102804, MAIN WIRE HARNESS P/N 4103784
(MODE SWITCH P/N 4102805, TEMP. RHEOSTAT P/N 4102735, BLWR SWT. P/N 4100362)

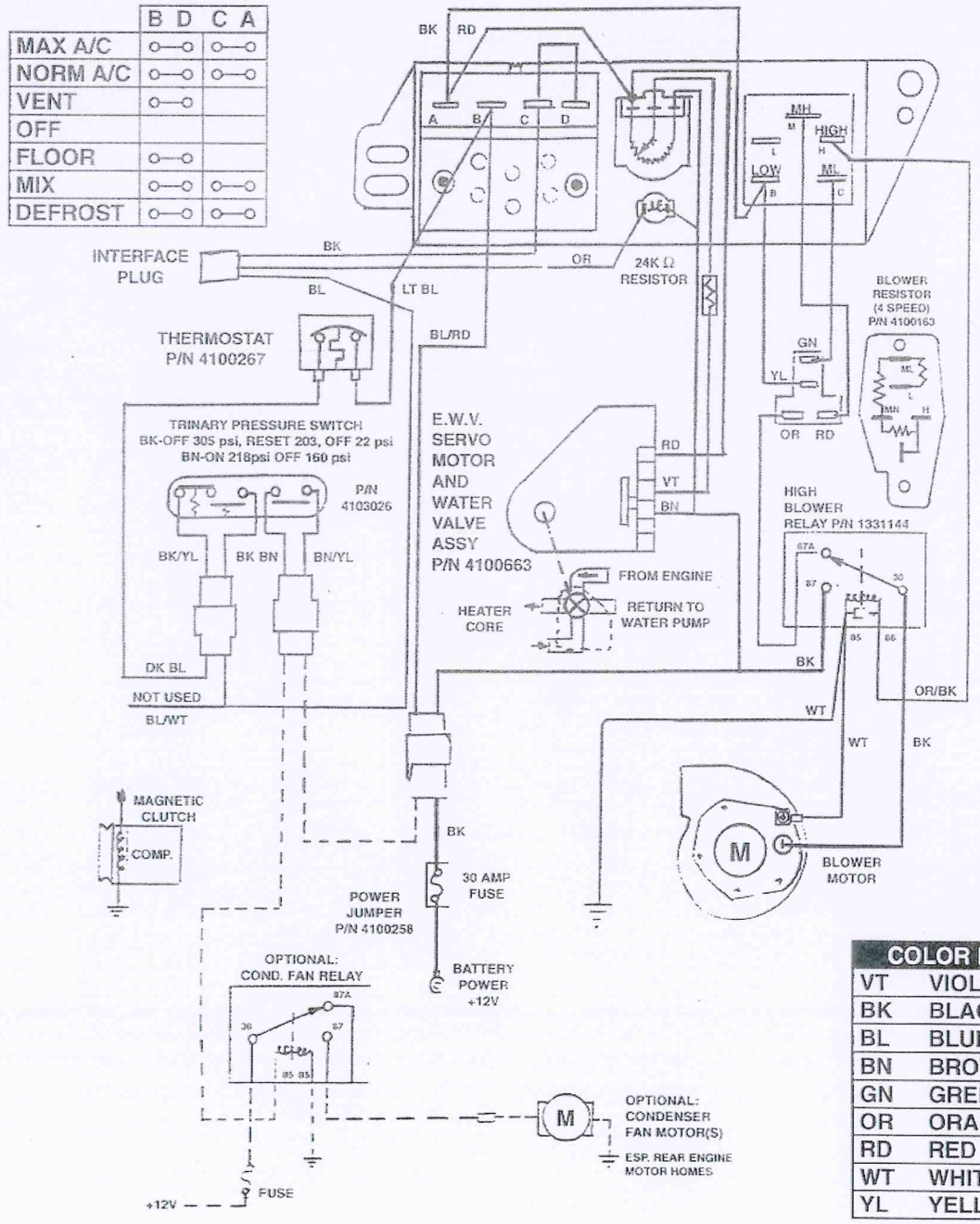

COLOR KEY	
VT	VIOLET
BK	BLACK
BL	BLUE
BN	BROWN
GN	GREEN
OR	ORANGE
RD	RED
WT	WHITE
YL	YELLOW

79 NORTH 10TH STREET
KANSAS CITY, KANSAS 66102
913-371-5373

17103 STATE ROAD 4 EAST
GOSHEN, INDIANA 46528
574-534-1516

CONTENTS

AUTOMOTIVE DASH AIR

BUS UNITS

RV SYSTEMS

LIMOUSINE SYSTEMS

OFF ROAD UNITS

REAR HEAT/COOL & SPECIAL APPLICATIONS

PARTS GUIDE

TROUBLE SHOOTING

FORD

CUSTOM ROTARY CONTROL HEAD WIRING
ELECTRIC WATER VALVE UNIT

CONTROL HEAD ASSY P/N 4102804, MAIN WIRE HARNESS P/N 4103784
(MODE SWITCH P/N 4102805, TEMP. RHEOSTAT P/N 4102735, BLWR SWT. P/N 4100362)

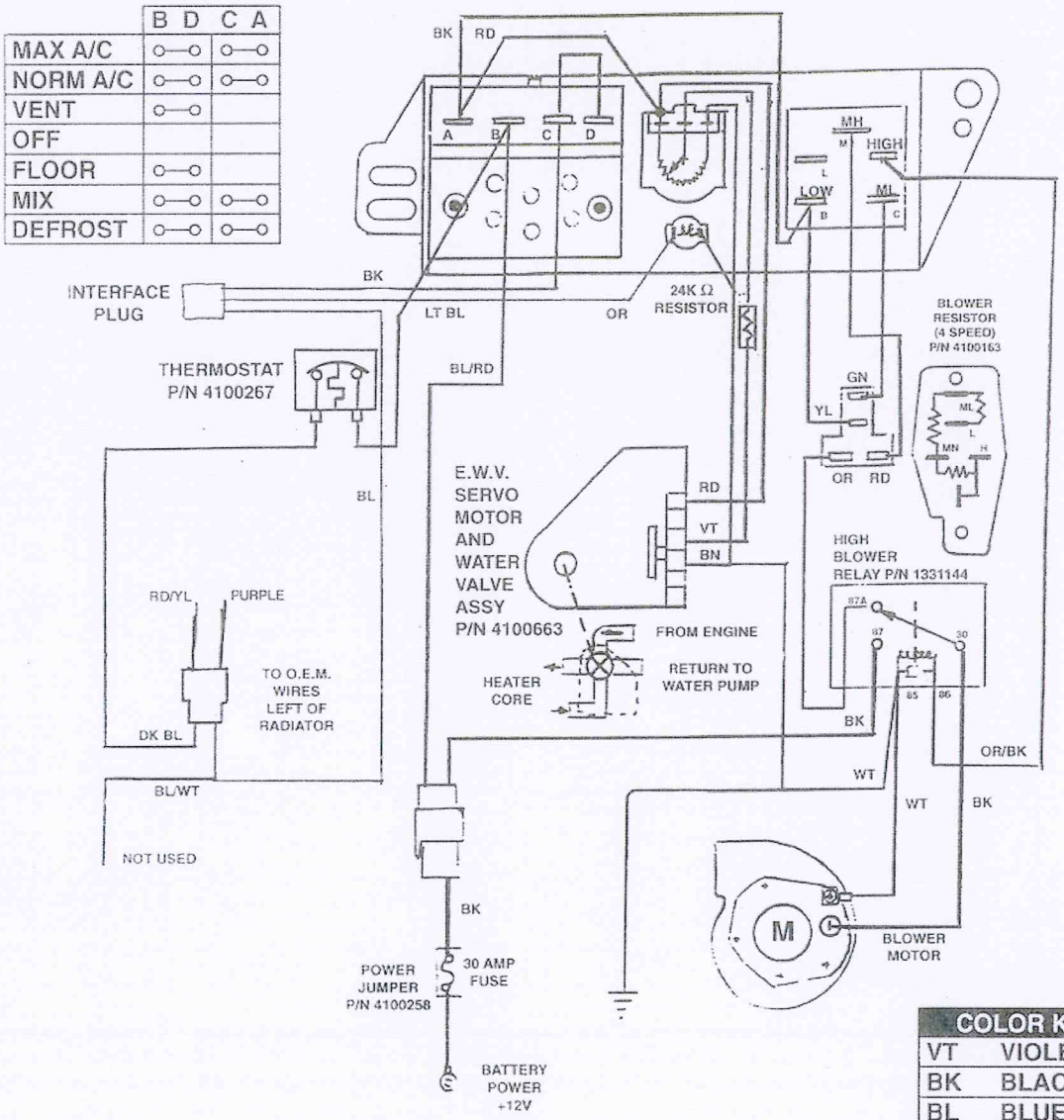

COLOR KEY	
VT	VIOLET
BK	BLACK
BL	BLUE
BN	BROWN
GN	GREEN
OR	ORANGE
RD	RED
WT	WHITE
YL	YELLOW

79 NORTH 10TH STREET
KANSAS CITY, KANSAS 66102
913-371-5373

17103 STATE ROAD 4 EAST
GOSHEN, INDIANA 46528
574-534-1516

CONTENTS

AUTOMOTIVE DASH AIR

BUS UNITS

RV SYSTEMS

LIMOUSINE SYSTEMS

OFF ROAD UNITS

REAR HEAT/COOL & SPECIAL APPLICATIONS

PARTS GUIDE

TROUBLE SHOOTING

SPARTAN AND SINGLE RAIL FREIGHTLINER

CUSTOM ROTARY CONTROL HEAD WIRING

ELECTRIC WATER VALVE UNIT

CONTROL HEAD ASSY P/N 4102804, MAIN WIRE HARNESS P/N 4103784
(MODE SWITCH P/N 4102805, TEMP. RHEOSTAT P/N 4102735, BLWR SWT. P/N 4100362)

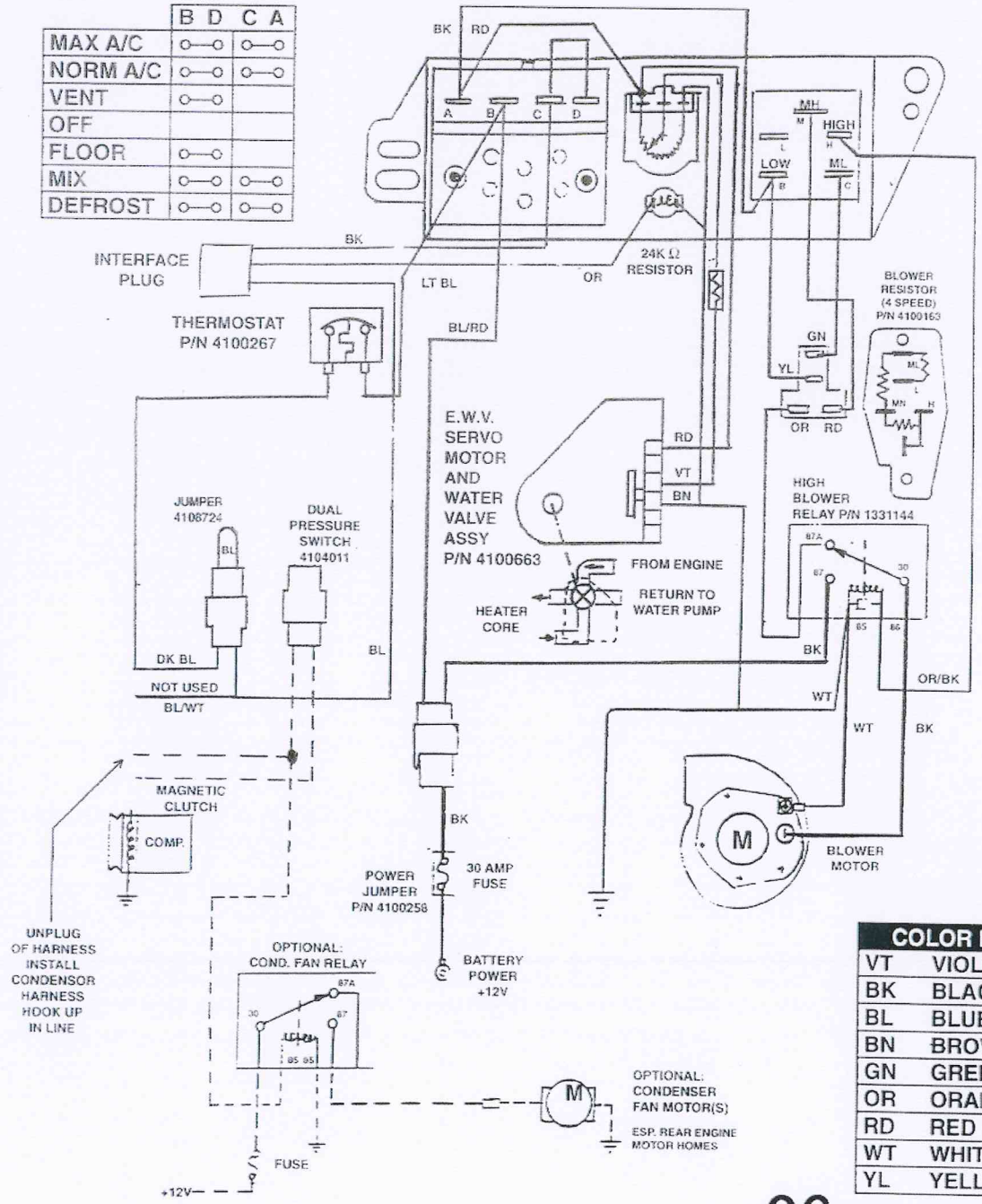

COLOR KEY	
VT	VIOLET
BK	BLACK
BL	BLUE
BN	BROWN
GN	GREEN
OR	ORANGE
RD	RED
WT	WHITE
YL	YELLOW

79 NORTH 10TH STREET
KANSAS CITY, KANSAS 66102
913-371-5373

17103 STATE ROAD 4 EAST
GOSHEN, INDIANA 46528
574-534-1516

CONTENTS

AUTOMOTIVE DASH AIR

BUS UNITS

RV SYSTEMS

LIMOUSINE SYSTEMS

OFF ROAD UNITS

REAR HEAT/COOL & SPECIAL APPLICATIONS

PARTS GUIDE

TROUBLE SHOOTING

WORKHORSE

CUSTOM ROTARY CONTROL HEAD WIRING
ELECTRIC WATER VALVE UNIT

CONTROL HEAD ASSY P/N 4102804, MAIN WIRE HARNESS P/N 4103784
(MODE SWITCH P/N 4102805, TEMP. RHEOSTAT P/N 4102735, BLWR SWT. P/N 4100362)

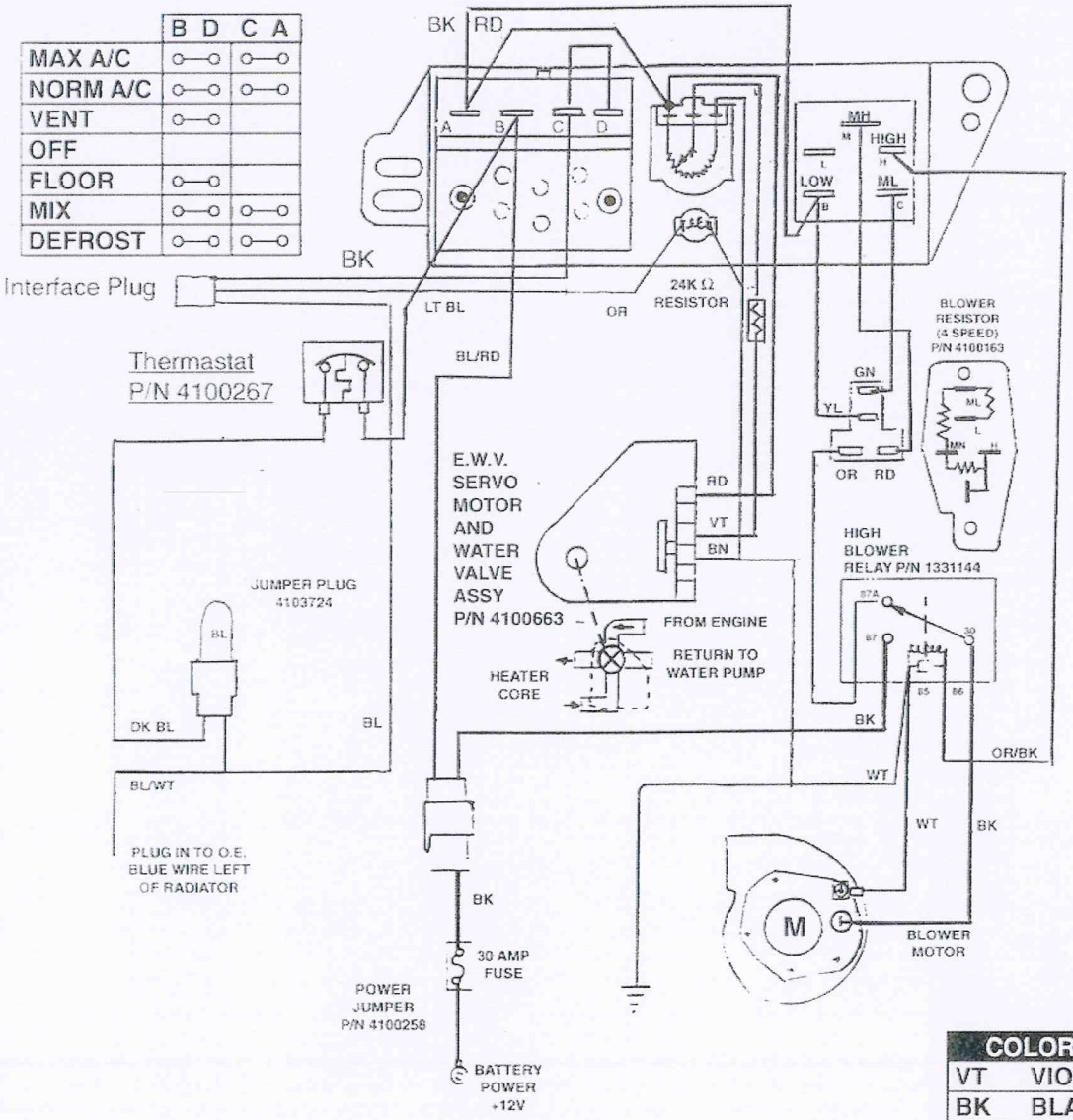

COLOR KEY	
VT	VIOLET
BK	BLACK
BL	BLUE
BN	BROWN
GN	GREEN
OR	ORANGE
RD	RED
WT	WHITE
YL	YELLOW

79 NORTH 10TH STREET
KANSAS CITY, KANSAS 66102
913-371-5373

17103 STATE ROAD 4 EAST
GOSHEN, INDIANA 46528
574-534-1516

CONTENTS

AUTOMOTIVE DASH AIR

BUS UNITS

RV SYSTEMS

LIMOUSINE SYSTEMS

OFF ROAD UNITS

REAR HEAT/COOL & SPECIAL APPLICATIONS

PARTS GUIDE

TROUBLE SHOOTING

VACUUM DIAGRAM

STANDARD CONTROL HEAD VACUUM DIAGRAM

"APPLICABLE TO ACME SYSTEMS ONLY"

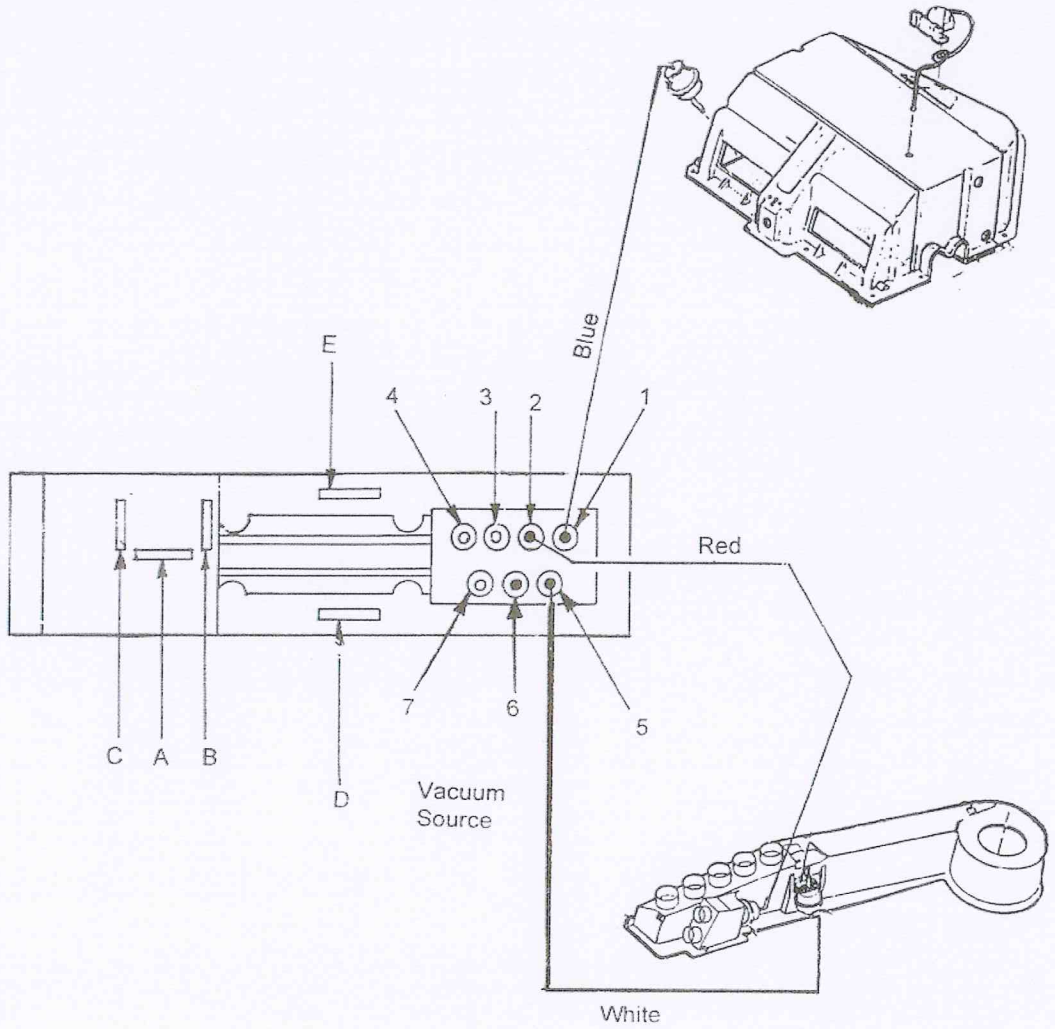

	VACUUM							ELECTRICAL				
	1	2	3	4	5	6	7	A	B	C	D	E
OFF	X	X			X	X		X				
MAX AC	X	X			X	X		X	X	X	X	X
A/C		X	X		X	X		X	X	X	X	X
VENT		X	X		X	X		X	X	X		X
HEAT		X	X			X	X	X		X		
DEF.			X	X		X	X	X		X	X	X

79 NORTH 10TH STREET
KANSAS CITY, KANSAS 66102
913-371-5373

17103 STATE ROAD 4 EAST
GOSHEN, INDIANA 46528
574-534-1516

CONTENTS

AUTOMOTIVE DASH AIR

BUS UNITS

RV SYSTEMS

LIMOUSINE SYSTEMS

OFF ROAD UNITS

REAR HEAT/COOL & SPECIAL APPLICATIONS

PARTS GUIDE

TROUBLE SHOOTING

VACUUM DIAGRAM

BI-LEVEL CONTROL HEAD VACUUM DIAGRAM

"APPLICABLE TO ACME SYSTEMS ONLY"

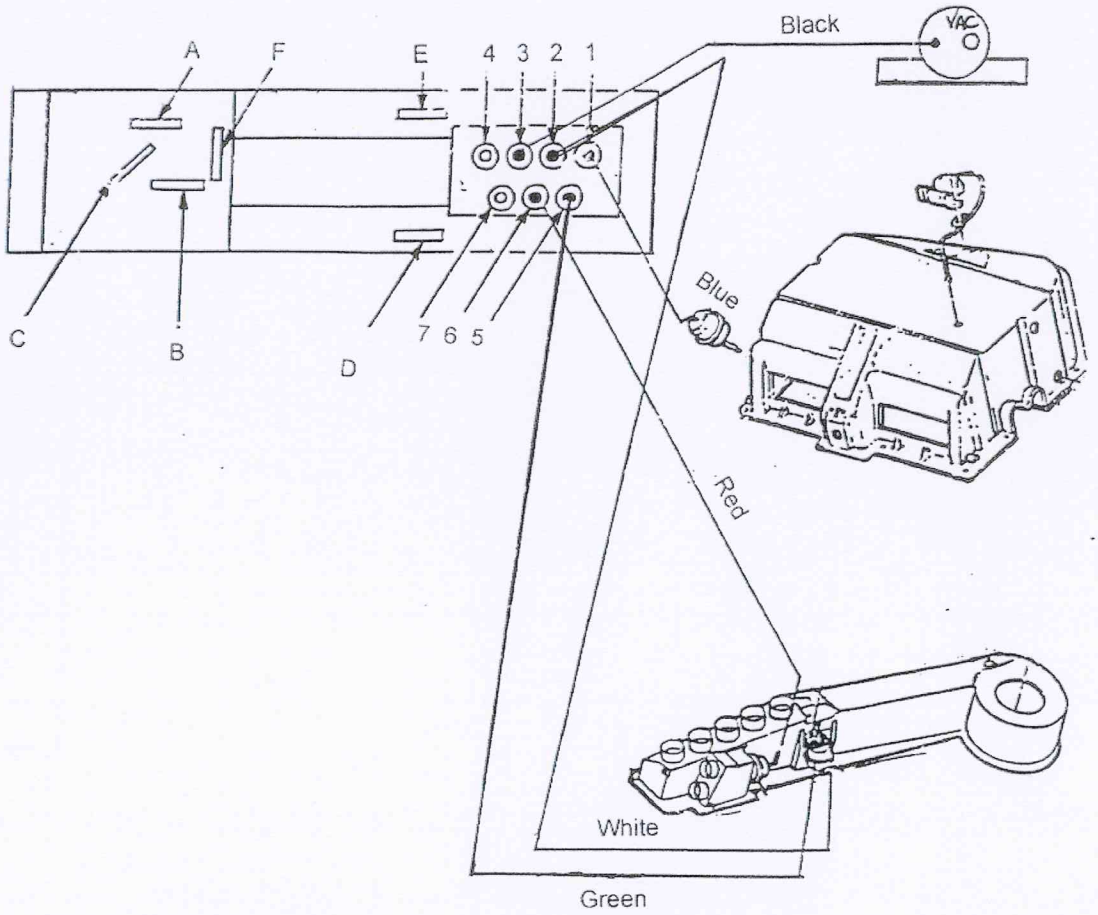

	VACUUM							ELECTRICAL					
	1	2	3	4	5	6	7	A	B	C	D	E	F
OFF	X	X	X		X	X			X	X			
MAX AC	X	X	X		X	X		X	X	X	X	X	X
A/C		X	X		X	X		X	X	X	X	X	X
*VENT		X	X		X	X		X	X	X	X	X	X
HEAT			X			X		X	X	X		X	X
DEF.			X					X	X	X	X	X	X
*BI-LEVEL		X	X			X		X	X	X	X	X	X

* Pull Out Button For Non-A/C Mode.

79 NORTH 10TH STREET
KANSAS CITY, KANSAS 66102
913-371-5373

17103 STATE ROAD 4 EAST
GOSHEN, INDIANA 46528
574-534-1516

CONTENTS

AUTOMOTIVE DASH AIR

BUS UNITS

RV SYSTEMS

LIMOUSINE SYSTEMS

OFF ROAD UNITS

REAR HEAT/COOL & SPECIAL APPLICATIONS

PARTS GUIDE

TROUBLE SHOOTING

VACUUM DIAGRAM

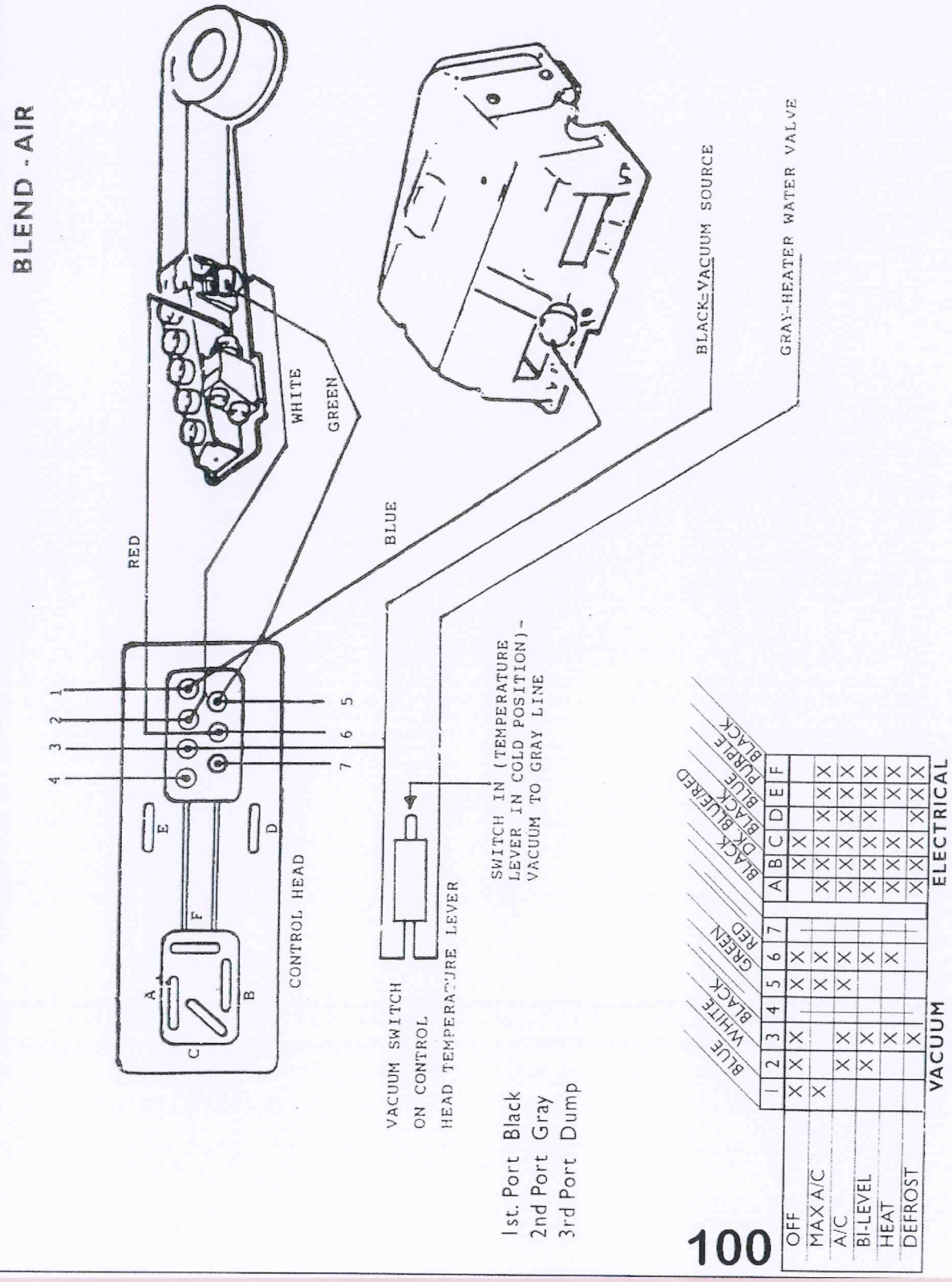

79 NORTH 10TH STREET
KANSAS CITY, KANSAS 66102
913-371-5373

17103 STATE ROAD 4 EAST
GOSHEN, INDIANA 46528
574-534-1516

CONTENTS

AUTOMOTIVE DASH AIR

BUS UNITS

RV SYSTEMS

LIMOUSINE SYSTEMS

OFF ROAD UNITS

REAR HEAT/COOL & SPECIAL APPLICATIONS

PARTS GUIDE

TROUBLE SHOOTING

WIRING DIAGRAM

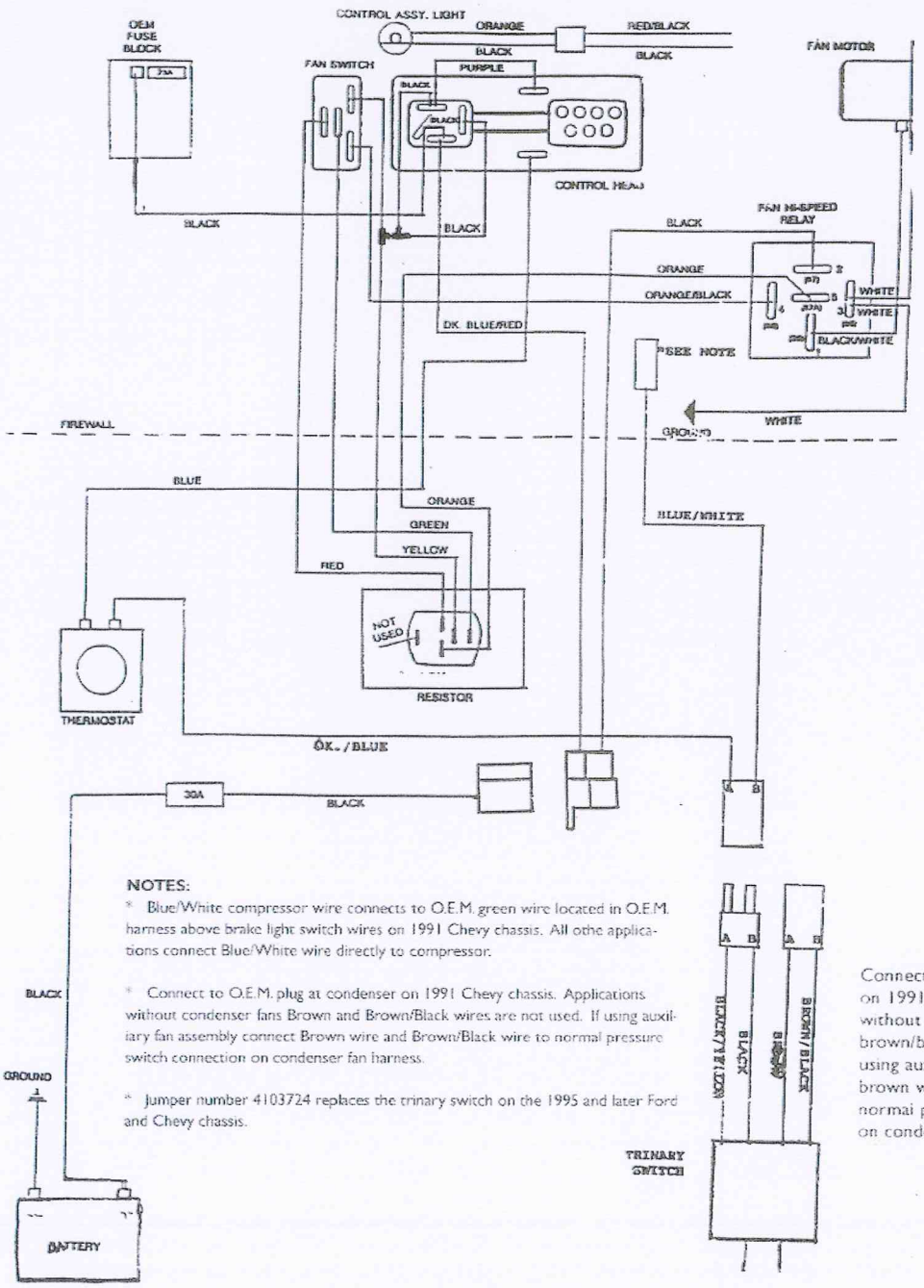

NOTES:

* Blue/White compressor wire connects to O.E.M. green wire located in O.E.M. harness above brake light switch wires on 1991 Chevy chassis. All othe applications connect Blue/White wire directly to compressor.

* Connect to O.E.M. plug at condenser on 1991 Chevy chassis. Applications without condenser fans Brown and Brown/Black wires are not used. If using auxiliary fan assembly connect Brown wire and Brown/Black wire to normal pressure switch connection on condenser fan harness.

* Jumper number 4103724 replaces the trinary switch on the 1995 and later Ford and Chevy chassis.

Connect to O.E.M. Plug at Condenser on 1991 Chevy chassis. Applications without condenser fans brown and brown/black wires are not used. If using auxiliary fan assembly connect brown wire and brown/black wire to normal pressure switch connection on condenser fan harness.

* Blue/white compressor wire connects to O.E.M. green wire located in O.E.M. harness above brake light switch wires on 1991 Chevy chassis. All other applications connect blue/white wire directly to compressor.

79 NORTH 10TH STREET
KANSAS CITY, KANSAS 66102
913-371-5373

17103 STATE ROAD 4 EAST
GOSHEN, INDIANA 46528
574-534-1516

CONTENTS

AUTOMOTIVE DASH AIR

BUS UNITS

RV SYSTEMS

LIMOUSINE SYSTEMS

OFF ROAD UNITS

REAR HEAT/COOL & SPECIAL APPLICATIONS

PARTS GUIDE

TROUBLE SHOOTING

WIRING DIAGRAM
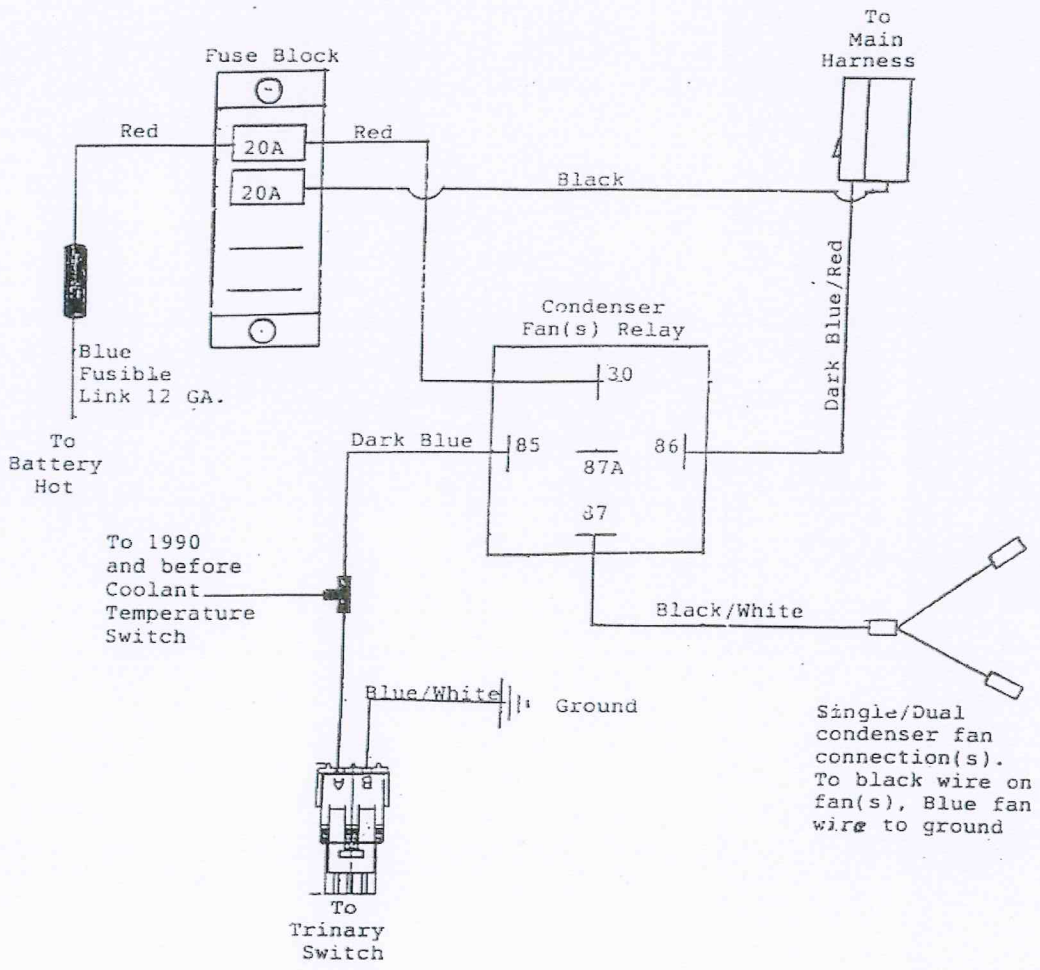
CLASS A CONDENSER FAN HARNESS 4100590